Selection Guide 2015 1EN

SQM Torquemotor Selection Guide

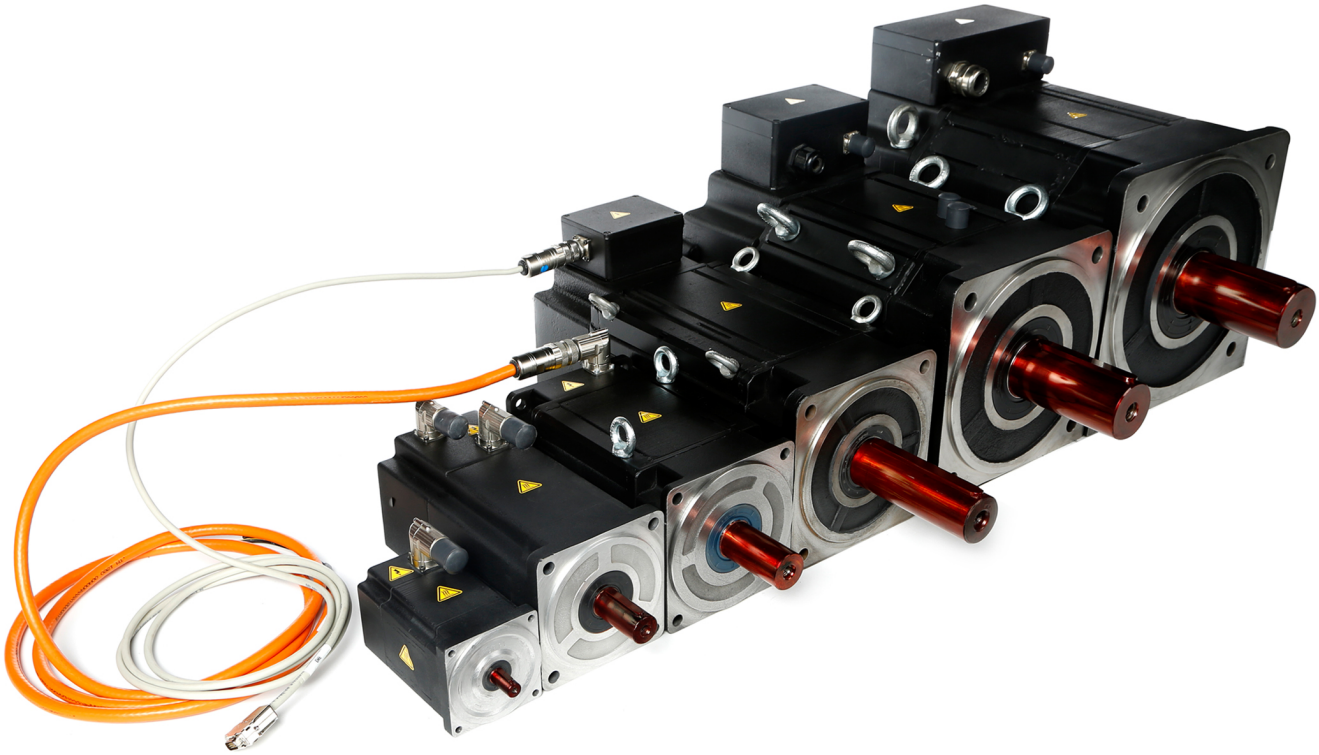

EMF Motor®

EMF Motor

Only the Best wins ...

Every solution comes from a real understanding of the challenges facing designers and users.

The ever-escalating demands of the marketplace mean increased pressure on machine designers and users at every turn. Time pressure. Demand for better performance. Having to think about the next generation machine even before the current one is built. While expactations are enormous, bugdet are not. EMF's revolutionary motor principle helps engineers not only overcome these challenges but also build truly differentiated machines.

Precise motion is our focus. SQM Torquemotor can distinctly differentiate a machine and deliver a marketplace advantage by improving its performance. This translates to overall increased efficiency on the factory floor. Perfectly deployed machine motion can make your customer's machine more reliable and efficient, and enhance accuracy.

How is this all possible? What is so different with SQM Torquemotor?

SQM Torquemotor works with patented motor principle that is most suitable for high torque at low speed applications. SQM works synchronously and the windings have no influence on the pole number. The high pole number is achieved by magnetic field.

As a result SQM Torquemotor, as a direct drive, offers great advantages in all performance criterias, such as very high energy efficiency, high dynamics, high overload capacity, quiet and maintenance free operation.

Table of Content

Benefits of SQM Torquemotor

• Best-in-class Performance	• Industry-leading motor torque density • The highest motor efficiency • High dynamics • Very low cogging • 100 % loyalty at slave mode follows the Master Drive in every step • Good controllability thanks to every high pole number • Overload capability • Quiet operation • Maintenance free • Getting rid of all gearbox problems, like backlash, oil leakage, maintanance, noise
• Applications with SQM Torquemotor	• Extruder • Injection machines • Master-Slave applications • Dynamic positioning • High Volume Low Speed fan • Conveyors, specially with start stop • Lift • Servo Press technology • Cogging punch • Flying saw • Rotary table • Cut to length applications in production lines (paper, plastic, metal etc.) • Winding and unwinding for folios, paper, sheet metals, cable etc. • Low Speed mixers for viscous liquids • Start Stop • And everywhere you would like to use a servo motor as direct drive...

SQM Torquemotor Series

Ceramic production

Carpet production

Hose production

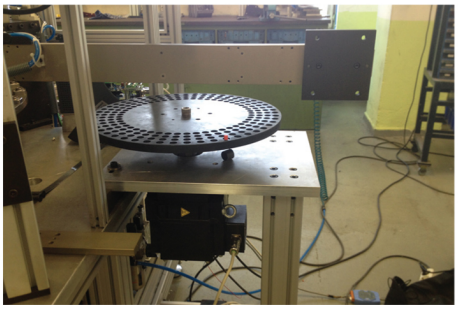

Indexing table

Ceramic conveyor

Coiler and Traverse for Rope

Roller table

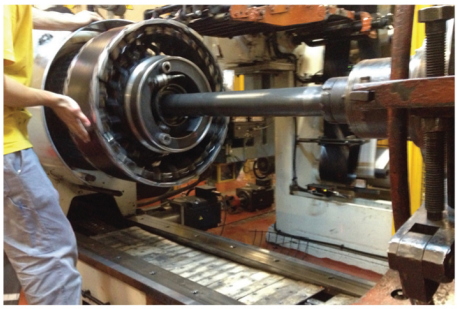

Tire production

Yarn production

Glazur Mixer - 185 Nm - 30 rpm

SQM Torque Range

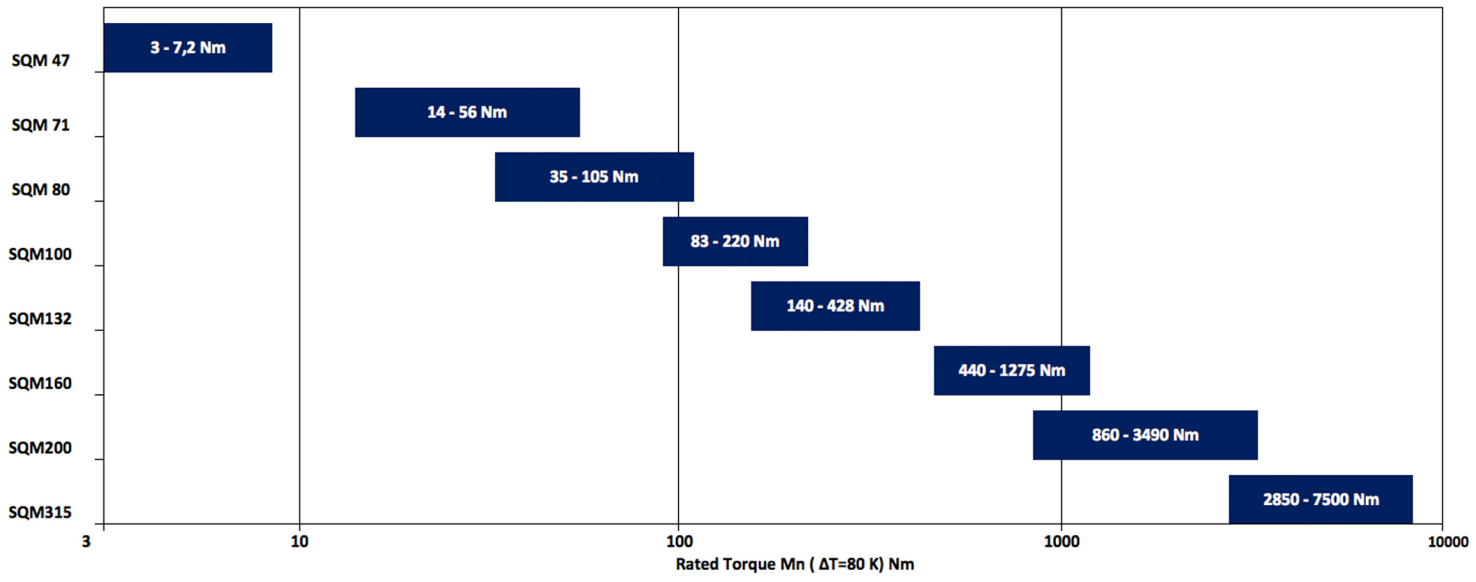

Environmental Limitations

Normal operating conditions:

a) According to IEC 60034-1, motors can operate in the following normal conditions.

· Ambient temperature within the range – 16 and + 40 0 C

· Altitude less than 1000 m

· Atmospheric pressure: 1050 hPa (mbar) = (750 mm Hg)

b) Power correction factor:

For operation conditions outside these limits, apply the power correction coefficient shown in the chart.

Correction coeffienct table

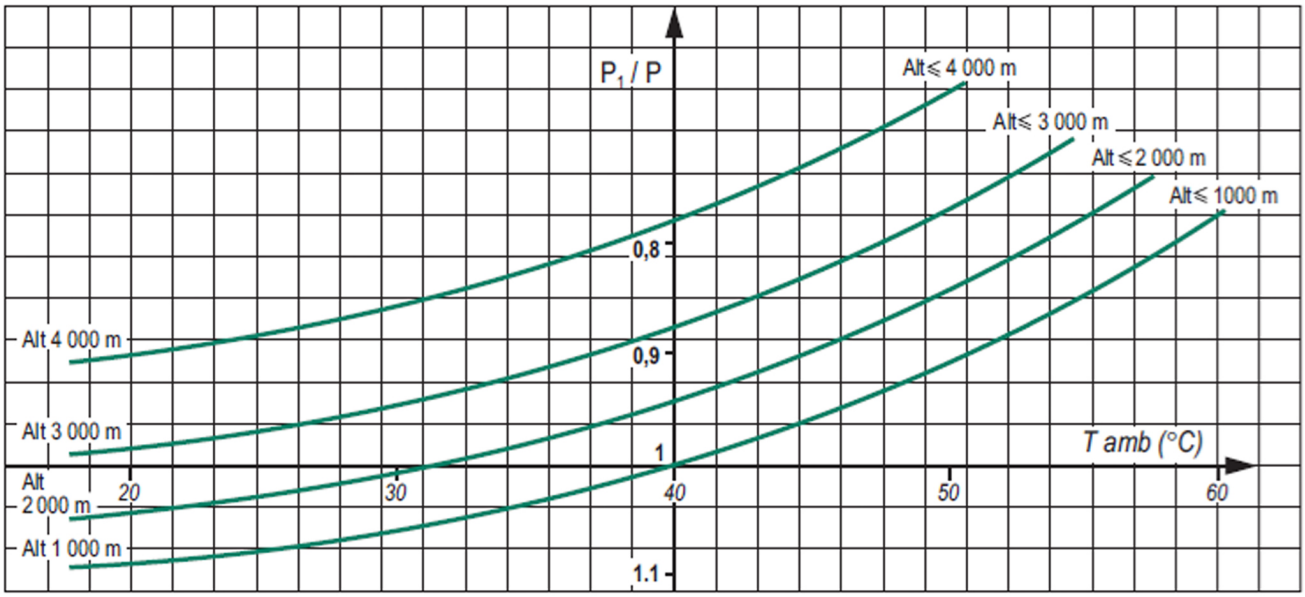

3-D Model Key Design Features

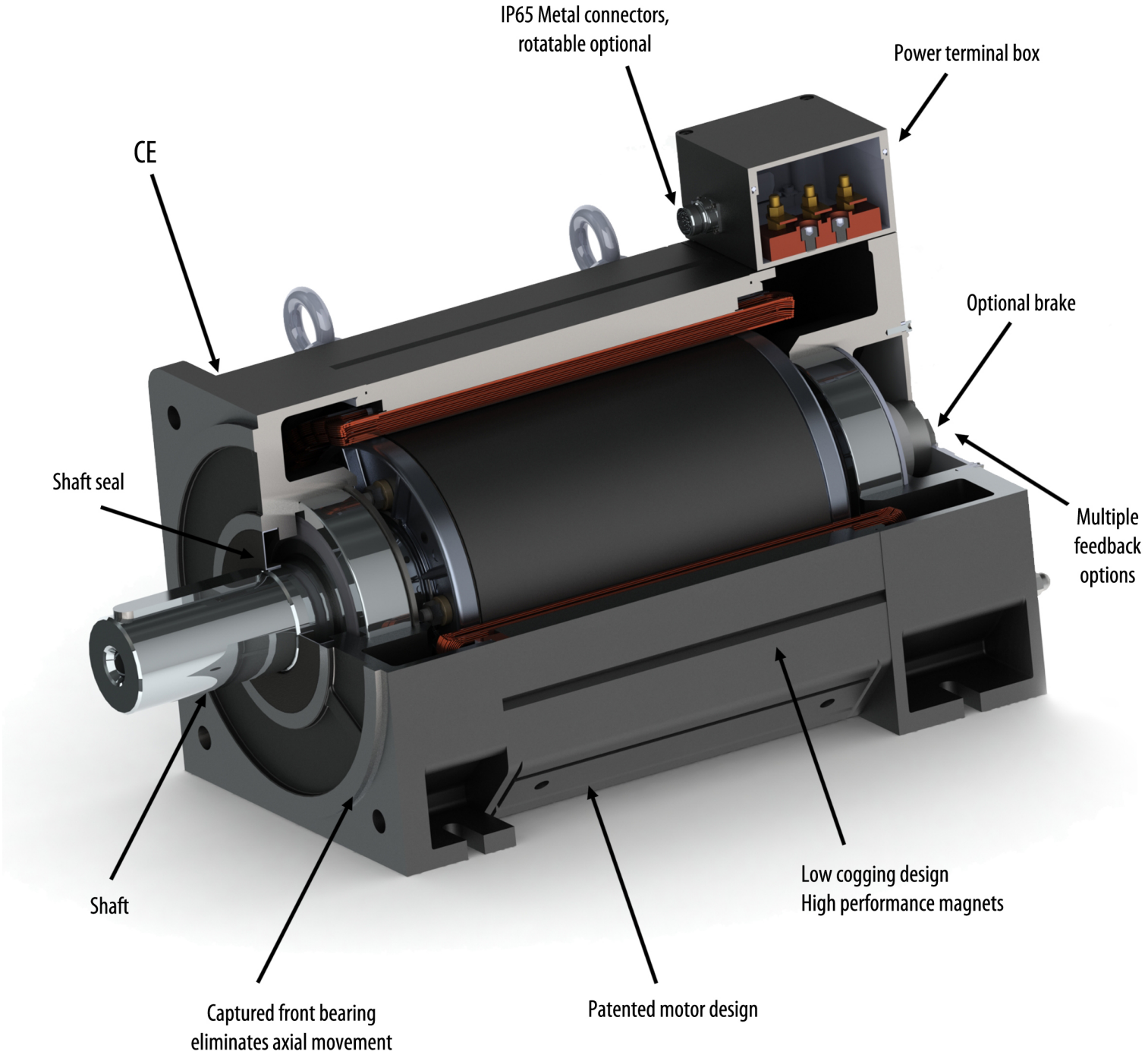

Model Nomenclature

SQM Torquemotor

SQM 160 20 500 B 00 2 S 2 068

SQM Series Torquemotor

Motor Frame Size
- 47
- 71
- 80
- 100
- 132
- 160
- 200
- 315

Iron Lenght
x 10 in mm

Motor Rated Speed (rpm)

Mechanical Brake
B = Brake
X = No Brake

Motor Pole Number

Motor Rated Voltage
1 = 230 VAC,
2 = 400 VAC,
3 = 460 VAC

Feedback
D = Digital Enc.,
R = Resolver,
S = SinCos,
B = Biss,
E = EnDat Enc.,
H = Hiperface,
X = without feedback

Thermal Protection
1 = PT100,
2 = PTO,
3 = PT100 + PTO

Special Code

General Specifications

Standard

Mounting Style	Standard Foot Mounted
Insulation Class	H class loaded to B
Protection Class	IP54
Vibration	A level according to IEC 60034-14
Ambient Temperature	0-40 °C
Storage Conditions	-30 °C ... +85°C
Thermal Protection	120°C PTO
Balance	Half key
Maintenance-free, pre-lubricated ball bearings	

Graphic Definition

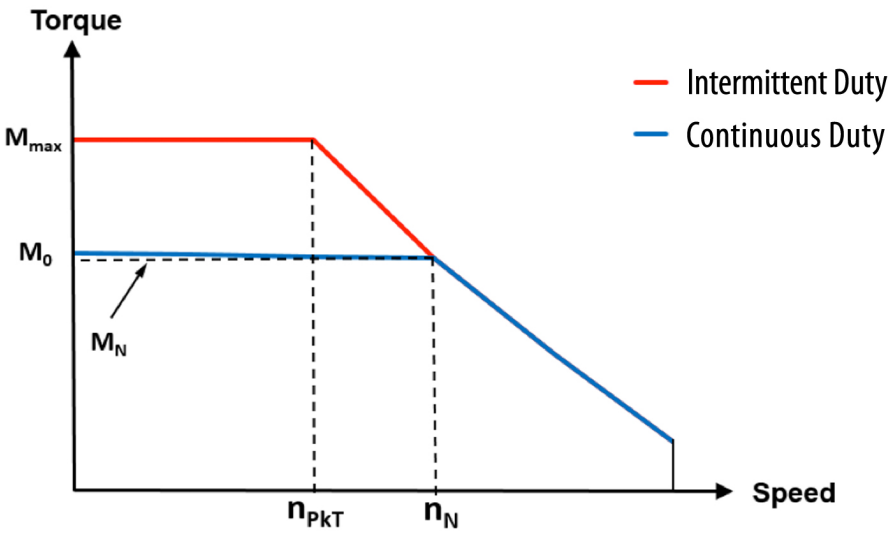

DEFINITIONS	
M_{max}	Peak stall torque for system
M_0	Continuous torque at stall
M_N	Continious rated torque
n_N	Rated Speed
n_{pkT}	Intersection of system peak torque with voltage limit line

SQM47-40 Performance Data

Reference Data	Symbol	SQM47-40				Unit	Tol.
Frame Size		47					
Nominal Torque (80 K) (1)(3)(6)	M_N	3,7	3,5	3,3	3	Nm	
Nominal Speed	n_N	500	750	1000	1500	rpm	
Nominal Power (80 K) (1)(3)(6)	P_N	0,19	0,27	0,35	0,47	kW	
Nominal Current (80 K) (1)(3)(6)	I_N	0,73	0,97	1,16	1,49	A	
Design Voltage	U_{ac}	3 x 400				VAC	
	U_{bus}	560				VDC	
Nominal Frequency	f_N	183	275	367	550	Hz	
Pole Number	p	44					
Nominal Efficiency	η	78	82	85	88	%	
Moment of Inertia	J_{mot}	0,000266				kgm^2	
Duty		S1				-	
Protection class		IP54				-	
Isolation metarial class		H loaded to B				-	
Thermal Protection		PTO(Klixon) 120°C				-	
Cooling		IC 410 - Natural				-	
Colour		RAL 9005				-	
Weight		4,50				kg	
Feedback		Please see the option list				-	
Connection Type		STAR				-	
Limit Data							
Peak Torque at cold motor (4)	M_{pkc}	8,0	7,5	7,1	6,5	Nm	
Cont. stall torque (80 K) (1)(3)(6)	M_0	3,85	3,64	3,42	3,11	Nm	
Stall current (80 K) (1)(3)(6)	I_0	1	1,4	1,6	2	A	
Peak Torque (80 K) (1)(3)(6)	M_{max}	5,6	5,3	5,0	4,5	Nm	
Maximum Current (80 K) (1)(3)(6)	I_{max}	1,10	1,46	1,74	2,24	A	
Speed at Peak Torque	n_{pkT}	330	505	680	1040	rpm	
Max. Speed	n_{max}	1550	2175	2740	3750	rpm	
Torque at max. speed	M_{nmax}	0,4	0,4	0,3	0,3	Nm	
Thermal Time Constant	t_{th}	50	50	50	50	minutes	
Working Ambient Temp.		0 to 40				°C	
Storage Temp.		-30 to +85				°C	
Electrical Data							
Torque Constant (2)	k_T	5,07	3,61	2,84	2,01	Nm/A	+/-10%
E.M.F (ph-ph) (2)	U_E	220	155	122	90	V/1000 rpm	+/-10%
Motor Constant (2)	k_M	0,47	0,45	0,50	0,46	Nm/√W	Nom
Winding Resistance (ph-ph) (2)	R_{ph}	77,6	43,2	21,6	12,6	Ω	+/-10%
Winding Inductance (ph-ph) (2)	L	329	164	102	55	mH	+/-10%

Notes:

(1) ΔT = 80 K; difference between winding-temperature and ambient-temperature = 80°C
(2) Electrical datas are measured at 25 °C
(3) All data referenced to sinusoidal commutation
(4) Peak torque duration at cold motor is 5 sec.
(5) Continuous stall torque is given for 5 rpm
(6) Winding temperature measured by using PT100 from one point.
Surface Measurement please check Temperature point drawing

Additional Note: For data,
please s rves
Other torque - speed - volt able.

SQM47-40 Performance Data (Continued)

SQM47-40 500 rpm nominal speed

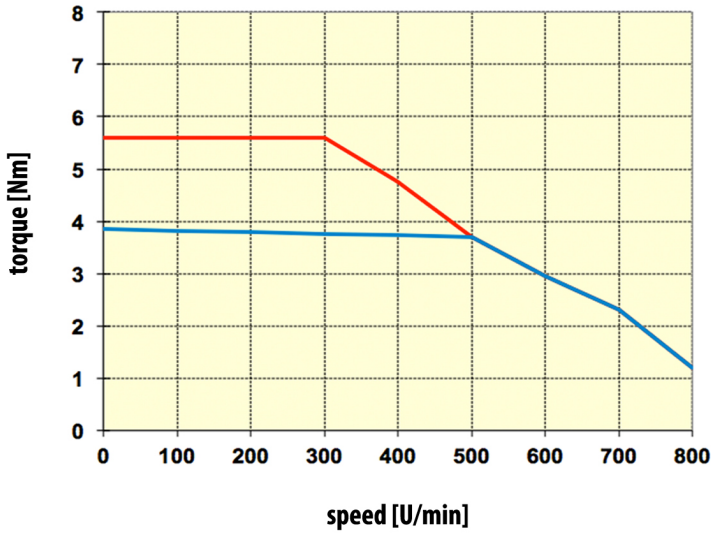

SQM47-40 750 rpm nominal speed

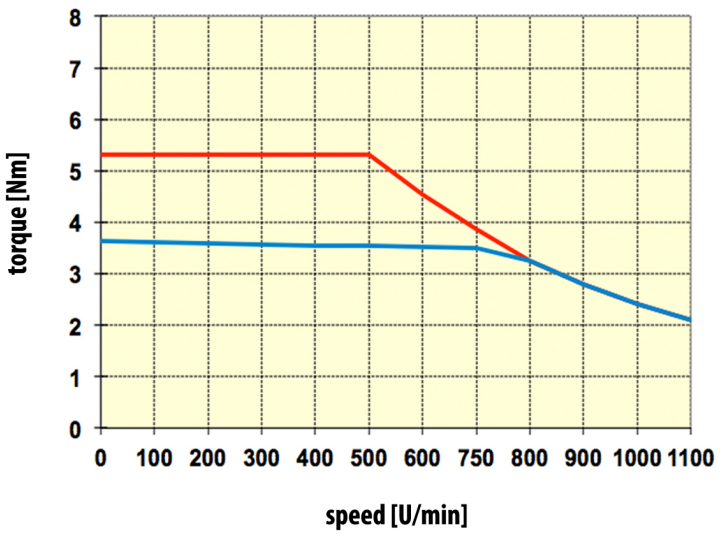

SQM47-40 1000 rpm nominal speed

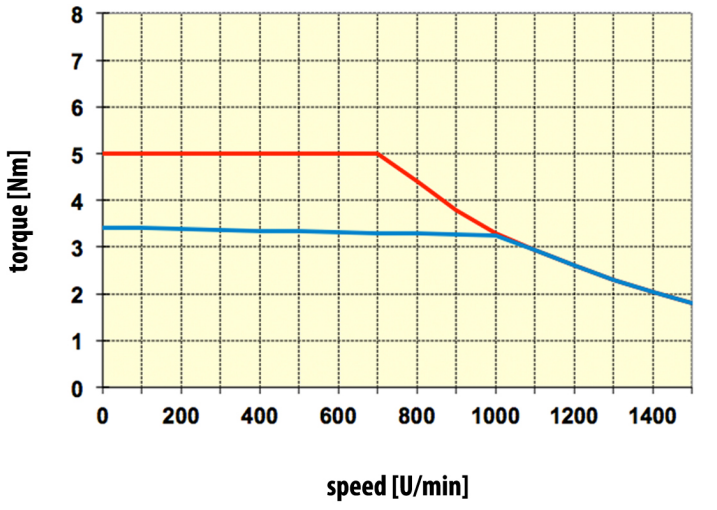

SQM47-40 1500 rpm nominal speed

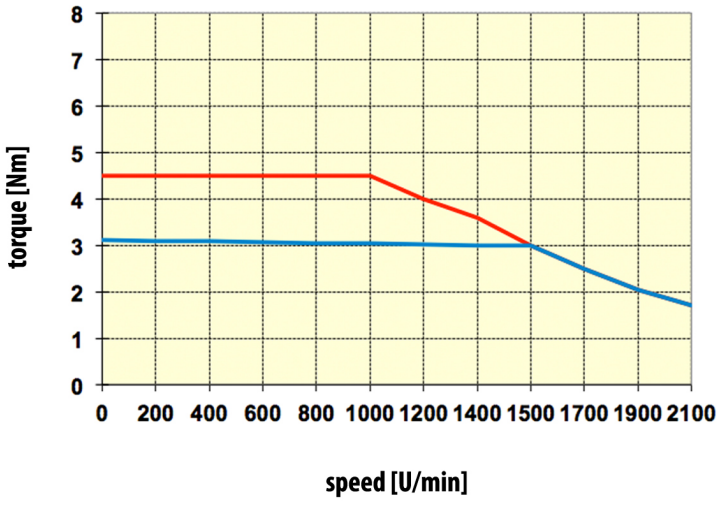

Mpeak cold motor | **Mpeak at Delta T=80k** | **Duty type: S3-40%, 1 min** | **Duty type: S3-60%, 1 min** | **Duty type: S1**

SQM47-70 Performance Data

Reference Data	Symbol	SQM47-70				Unit	Tol.
Frame Size		47					
Nominal Torque (80 K) (1)(3)(6)	M_N	5,6	5,2	4,8	4,2	Nm	
Nominal Speed	n_N	500	750	1000	1500	rpm	
Nominal Power (80 K) (1)(3)(6)	P_N	0,29	0,41	0,50	0,66	kW	
Nominal Current (80 K) (1)(3)(6)	I_N	1,08	1,26	1,4	1,67	A	
Design Voltage	U_{ac}	3 x 400				VAC	
	U_{bus}	560				VDC	
Nominal Frequency	f_N	183	275	367	550	Hz	
Pole Number	p	44					
Nominal Efficiency	η	79	83	86	89	%	
Moment of Inertia	J_{mot}	0,000434				kgm^2	
Duty		S1				-	
Protection class		IP54				-	
Isolation metarial class		H loaded to B				-	
Thermal Protection		PTO(Klixon) 120°C				-	
Cooling		IC 410 - Natural				-	
Colour		RAL 9005				-	
Weight		6,00				kg	
Feedback		Please see the option list				-	
Connection Type		STAR				-	
Limit Data							
Peak Torque at cold motor (4)	M_{pkc}	12,0	11,2	10,3	9,0	Nm	
Cont. stall torque (80 K) (1)(3)(6)	M_0	6,05	5,62	5,18	4,54	Nm	
Stall current (80 K) (1)(3)(6)	I_0	1,4	1,7	2	2,3	A	
Peak Torque (80 K) (1)(3)(6)	M_{max}	8,4	7,8	7,2	6,3	Nm	
Maximum Current (80 K) (1)(3)(6)	I_{max}	1,62	1,89	2,10	2,51	A	
Speed at Peak Torque	n_{pkT}	340	520	700	1050	rpm	
Max. Speed	n_{max}	1400	1950	2450	3300	rpm	
Torque at max. speed	M_{nmax}	0,6	0,5	0,5	0,4	Nm	
Thermal Time Constant	t_{th}	50	50	50	50	minutes	
Working Ambient Temp.		0 to 40				°C	
Storage Temp.		-30 to +85				°C	
Electrical Data							
Torque Constant (2)	k_T	5,19	4,13	3,43	2,51	Nm/A	+/-10%
E.M.F (ph-ph) (2)	U_E	248	180	146	111	V/1000 rpm	+/-10%
Motor Constant (2)	k_M	0,71	0,75	0,78	0,73	Nm/√W	Nom
Winding Resistance (ph-ph) (2)	R_{ph}	35,3	20	12,8	7,9	Ω	+/-10%
Winding Inductance (ph-ph) (2)	L	241,3	126	83	48,3	mH	+/-10%

Notes:

(1) ΔT = 80 K; difference between winding-temperature and ambient-temperature = 80°C
(2) Electrical datas are measured at 25 °C
(3) All data referenced to sinusoidal commutation
(4) Peak torque duration at cold motor is 5 sec.
(5) Continuous stall torque is given for 5 rpm
(6) Winding temperature measured by using PT100 from one point.
Surface Measurement please check Temperature point drawing

Additional Note: For other performance data, please see torque/speed curves
Other torque - speed - voltage values are available.

SQM47-70 Performance Curves

SQM47-70 500 rpm nominal speed

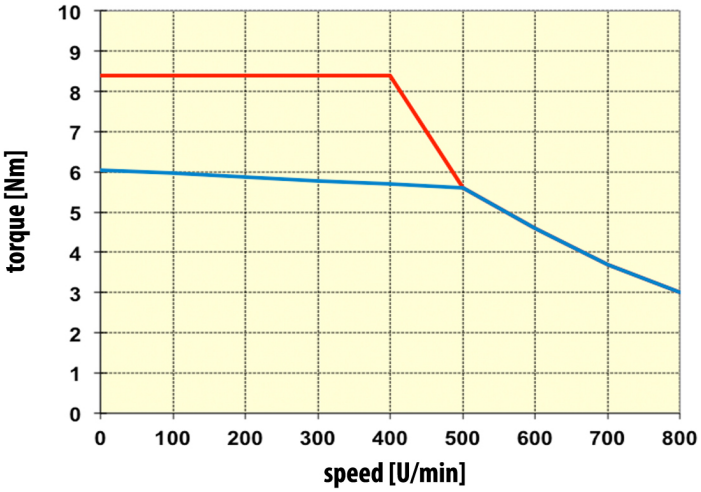

SQM47-70 750 rpm nominal speed

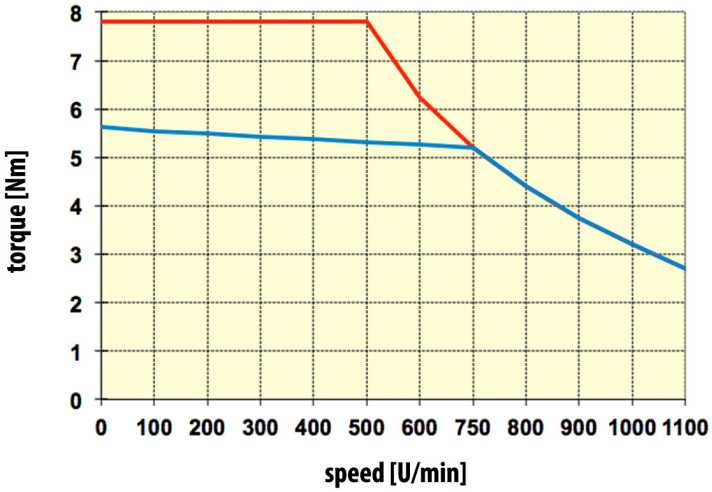

SQM47-70 1000 rpm nominal speed

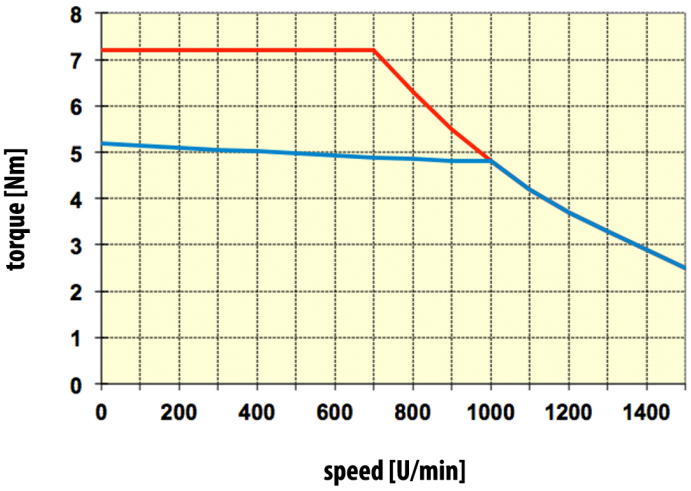

SQM47-70 1500 rpm nominal speed

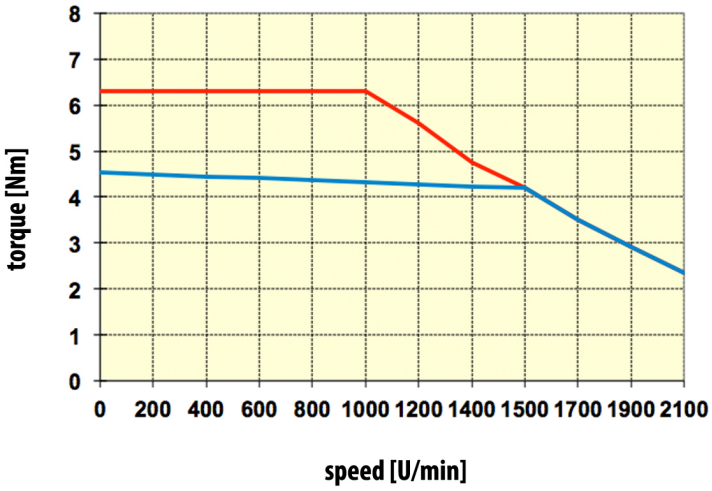

Mpeak cold motor | **Mpeak at Delta T=80k** | **Duty type: S3-40%, 1 min** | **Duty type: S3-60%, 1 min** | **Duty type: S1**

SQM47-100 Performance Data

Reference Data	Symbol	SQM47-100				Unit	Tol.
Frame Size		47					
Nominal Torque (80 K)(1)(3)(6)	M_N	7,2	6,7	6,1	5,4	Nm	
Nominal Speed	n_N	500	750	1000	1500	rpm	
Nominal Power (80 K)(1)(3)(6)	P_N	0,38	0,53	0,64	0,85	kW	
Nominal Current (80 K)(1)(3)(6)	I_N	1,17	1,44	1,53	1,62	A	
Design Voltage	U_{ac}	3 x 400				VAC	
	U_{bus}	560				VDC	
Nominal Frequency	f_N	183	275	367	550	Hz	
Pole Number	p	44					
Nominal Efficiency	η	81	85	88	90	%	
Moment of Inertia	J_{mot}	0,000602				kgm^2	
Duty		S1				-	
Protection class		IP54				-	
Isolation metarial class		H loaded to B				-	
Thermal Protection		PTO(Klixon) 120°C				-	
Cooling		IC 410 - Natural				-	
Colour		RAL 9005				-	
Weight		7,50				kg	
Feedback		Please see the option list				-	
Connection Type		STAR				-	
Limit Data							
Peak Torque at cold motor (4)	M_{pkc}	15,5	14,4	13,1	11,6	Nm	
Cont. stall torque (80 K) (1)(3)(6)	M_0	8,1	7,5	6,8	6,0	Nm	
Stall current (80 K) (1)(3)(6)	I_0	1,6	2	2,3	2,8	A	
Peak Torque (80 K) (1)(3)(6)	M_{max}	10,8	10,1	9,2	8,1	Nm	
Maximum Current (80 K) (1)(3)(6)	I_{max}	1,76	2,16	2,30	2,43	A	
Speed at Peak Torque	n_{pkT}	345	520	700	1075	rpm	
Max. Speed	n_{max}	1280	1800	2240	3065	rpm	
Torque at max. speed	M_{nmax}	0,7	0,7	0,6	0,5	Nm	
Thermal Time Constant	t_{th}	50	50	50	50	minutes	
Working Ambient Temp.		0 to 40				°C	
Storage Temp.		-30 to +85				°C	
Electrical Data							
Torque Constant (2)	k_T	6,15	4,65	3,99	3,33	Nm/A	+/-10%
E.M.F (ph-ph) (2)	U_E	260	199	162	119	V/1000 rpm	+/-10%
Motor Constant (2)	k_M	1,07	1,04	1,10	1,22	Nm/√W	Nom
Winding Resistance (ph-ph) (2)	R_{ph}	22	13,3	8,8	5	Ω	+/-10%
Winding Inductance (ph-ph) (2)	L	185	108,4	71	38,3	mH	+/-10%

Notes:

(1) ΔT = 80 K; difference between winding-temperature and ambient-temperature = 80°C
(2) Electrical datas are measured at 25 °C
(3) All data referenced to sinusoidal commutation
(4) Peak torque duration at cold motor is 5 sec.
(5) Continuous stall torque is given for 5 rpm
(6) Winding temperature measured by using PT100 from one point.
Surface Measurement please check Temperature point drawing

Additional Note: For other performance data, please see torque/speed curves
Other torque - speed - voltage values are available.

SQM47-100 Performance Curves

SQM47-100 500 rpm nominal speed

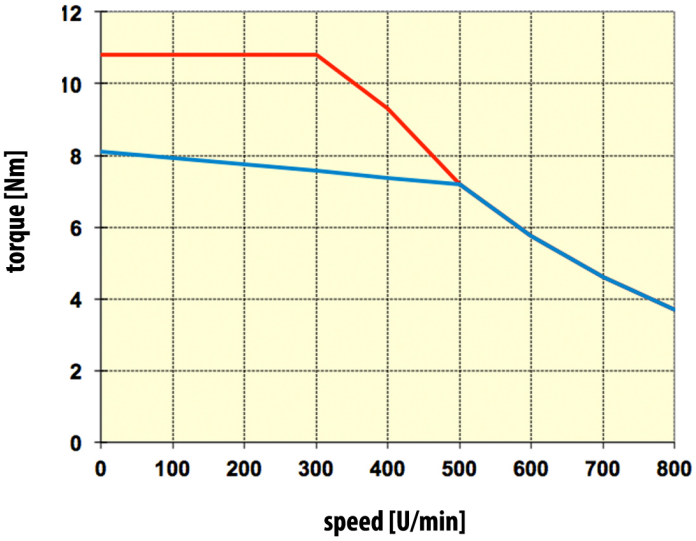

SQM47-100 750 rpm nominal speed

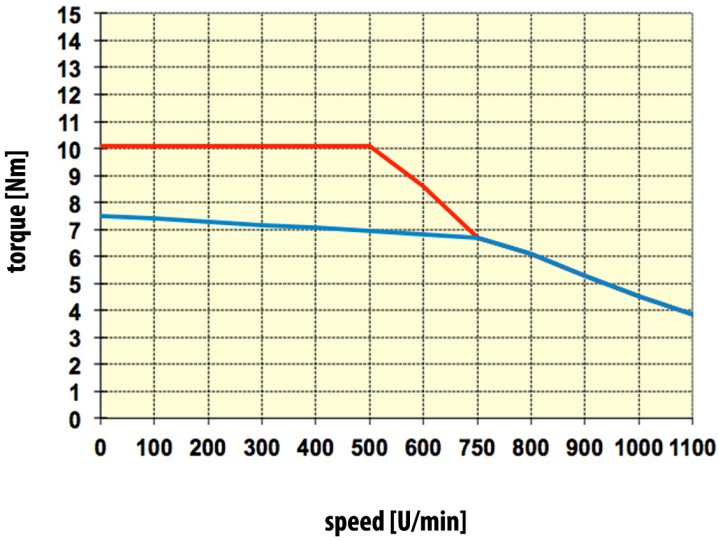

SQM47-100 1000 rpm nominal speed

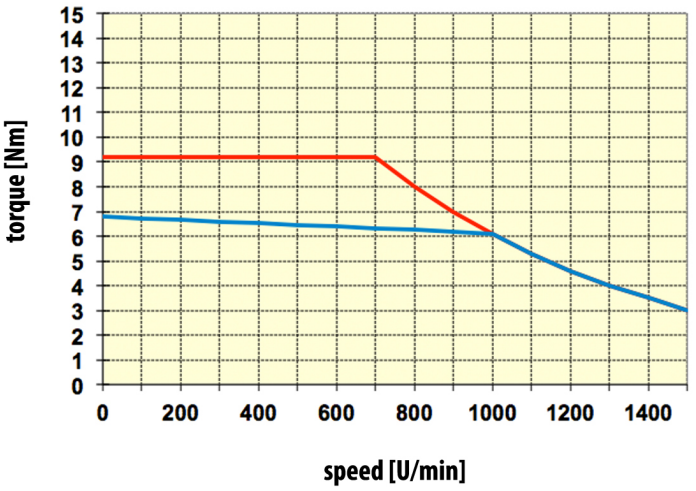

SQM47-100 1500 rpm nominal speed

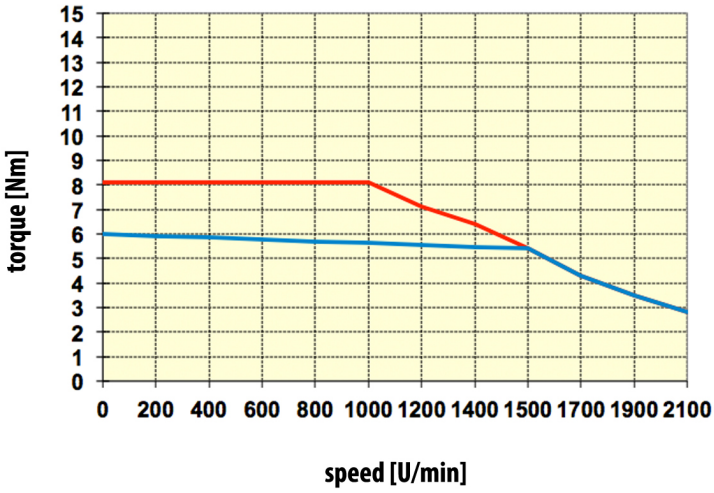

Mpeak cold motor | **Mpeak at Delta T=80k** | **Duty type: S3-40%, 1 min** | **Duty type: S3-60%, 1 min** | **Duty type: S1**

SQM71-90 Performance Data

Reference Data	Symbol	SQM71-90				Unit	Tol.
Frame Size		71					
Nominal Torque (80 K) (1)(3)(6)	M_N	26	24	19	14	Nm	
Nominal Speed	n_N	150	250	500	750	rpm	
Nominal Power (80 K) (1)(3)(6)	P_N	0,41	0,63	0,99	1,10	kW	
Nominal Current (80 K) (1)(3)(6)	I_N	1,8	2,6	3,5	2,8	A	
Design Voltage	U_{ac}	3 x 400				VAC	
	U_{bus}	560				VDC	
Nominal Frequency	f_N	85	142	283	425	Hz	
Pole Number	p	68					
Nominal Efficiency	η	77	83	90	91	%	
Moment of Inertia	J_{mot}	0,004898				kgm^2	
Duty		S1				-	
Protection class		IP54				-	
Isolation metarial class		H loaded to B				-	
Thermal Protection		PTO(Klixon) 120°C				-	
Cooling		IC 410 - Natural				-	
Colour		RAL 9005				-	
Weight		18,00				kg	
Feedback		Please see the option list				-	
Connection Type		STAR				-	
Limit Data							
Peak Torque at cold motor (4)	M_{pkc}	55,9	51,6	40,9	30,1	Nm	
Cont. stall torque (80 K) (1)(3)(6)	M_0	27,1	25,0	19,7	14,6	Nm	
Stall current (80 K) (1)(3)(6)	I_0	1,9	2,7	3,5	3,4	A	
Peak Torque (80 K) (1)(3)(6)	M_{max}	39,0	36,0	28,5	21,0	Nm	
Maximum Current (80 K) (1)(3)(6)	I_{max}	2,70	3,90	5,25	4,20	A	
Speed at Peak Torque	n_{pkT}	105	178	370	580	rpm	
Max. Speed	n_{max}	353	550	940	1165	rpm	
Torque at max. speed	M_{nmax}	2,6	2,4	1,9	1,4	Nm	
Thermal Time Constant	t_{th}	55	55	55	55	minutes	
Working Ambient Temp.		0 to 40				°C	
Storage Temp.		-30 to +85				°C	
Electrical Data							
Torque Constant (2)	k_T	14,44	9,23	5,43	5,00	Nm/A	+/-10%
E.M.F (ph-ph) (2)	U_E	1193	764	446	334	V/1000 rpm	+/-10%
Motor Constant (2)	k_M	3,52	3,48	3,50	4,30	Nm/√W	Nom
Winding Resistance (ph-ph) (2)	R_{ph}	11,2	4,7	1,6	0,9	Ω	+/-10%
Winding Inductance (ph-ph) (2)	L	297	122	41,8	23,5	mH	+/-10%

Notes:

(1) ΔT = 80 K; difference between winding-temperature and ambient-temperature = 80°C
(2) Electrical datas are measured at 25 °C
(3) All data referenced to sinusoidal commutation
(4) Peak torque duration at cold motor is 5 sec.
(5) Continuous stall torque is given for 5 rpm
(6) Winding temperature measured by using PT100 from one point.
Surface Measurement please check Temperature point drawing

Additional Note: For other performance data, please see torque/speed curves
Other torque - speed - voltage values are available.

SQM71-90 Performance Curves

SQM71-90 150 rpm nominal speed

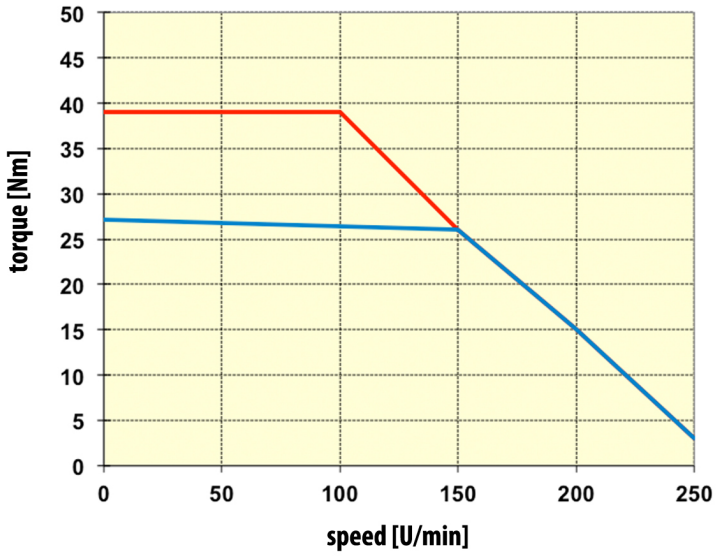

SQM71-90 250 rpm nominal speed

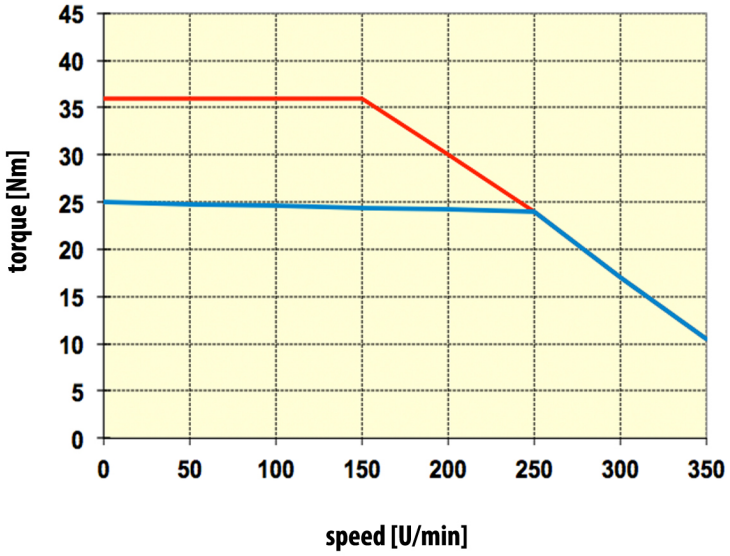

SQM71-90 500 rpm nominal speed

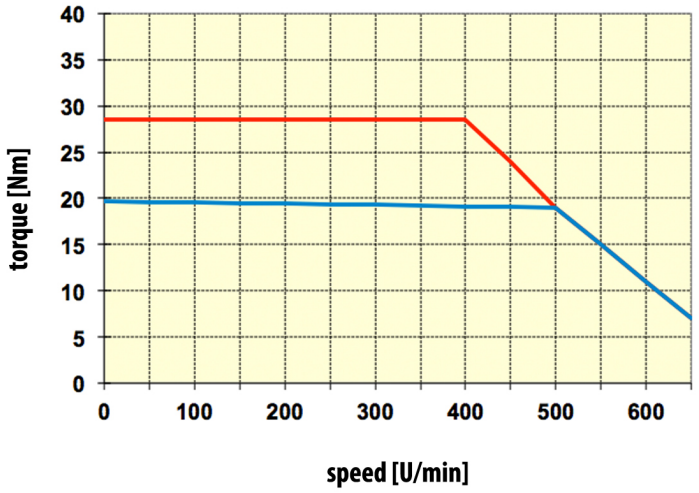

SQM71-90 750 rpm nominal speed

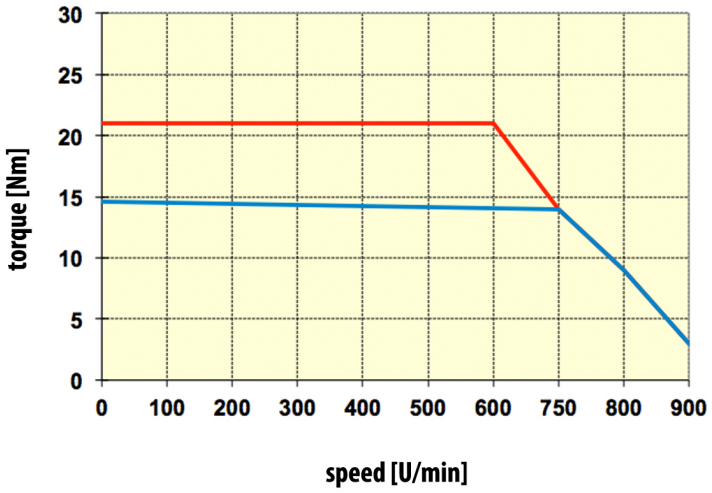

Mpeak cold motor | **Mpeak at Delta T=80k** | **Duty type: S3-40%, 1 min** | **Duty type: S3-60%, 1 min** | **Duty type: S1**

SQM71-130 Performance Data

Reference Data	Symbol	SQM71-130				Unit	Tol.
Frame Size		71					
Nominal Torque (80 K) (1)(3)(6)	M_N	41	37	28	21	Nm	
Nominal Speed	n_N	150	250	500	750	rpm	
Nominal Power (80 K) (1)(3)(6)	P_N	0,64	0,97	1,47	1,65	kW	
Nominal Current (80 K) (1)(3)(6)	I_N	3,1	4,4	5,1	4,7	A	
Design Voltage	U_{ac}	3 x 400				VAC	
	U_{bus}	560				VDC	
Nominal Frequency	f_N	85	142	283	425	Hz	
Pole Number	p	68					
Nominal Efficiency	η	79	84	90	92	%	
Moment of Inertia	J_{mot}	0,006907				kgm^2	
Duty		S1				-	
Protection class		IP54				-	
Isolation metarial class		H loaded to B				-	
Thermal Protection		PTO(Klixon) 120°C				-	
Cooling		IC 410 - Natural				-	
Colour		RAL 9005				-	
Weight		23,00				kg	
Feedback		Please see the option list				-	
Connection Type		STAR				-	
Limit Data							
Peak Torque at cold motor (4)	M_{pkc}	88,2	79,6	60,2	45,2	Nm	
Cont. stall torque (80 K) (1)(3)(6)	M_0	41,8	38,1	29,1	22,1	Nm	
Stall current (80 K) (1)(3)(6)	I_0	3,1	4,3	5,2	5	A	
Peak Torque (80 K) (1)(3)(6)	M_{max}	61,5	55,5	42,0	31,5	Nm	
Maximum Current (80 K) (1)(3)(6)	I_{max}	4,65	6,60	7,65	7,05	A	
Speed at Peak Torque	n_{pkT}	105	175	360	575	rpm	
Max. Speed	n_{max}	380	570	925	1200	rpm	
Torque at max. speed	M_{nmax}	4,1	3,7	2,8	2,1	Nm	
Thermal Time Constant	t_{th}	55	55	55	55	minutes	
Working Ambient Temp.		0 to 40				°C	
Storage Temp.		-30 to +85				°C	
Electrical Data							
Torque Constant (2)	k_T	13,23	8,41	5,49	4,47	Nm/A	+/-10%
E.M.F (ph-ph) (2)	U_E	1153	752	430	349	V/1000 rpm	+/-10%
Motor Constant (2)	k_M	4,48	4,34	4,83	5,01	Nm/√W	Nom
Winding Resistance (ph-ph) (2)	R_{ph}	5,8	2,5	0,86	0,53	Ω	+/-10%
Winding Inductance (ph-ph) (2)	L	193,9	82,2	26,9	17,7	mH	+/-10%

Notes:

(1) ΔT = 80 K; difference between winding-temperature and ambient-temperature = 80°C
(2) Electrical datas are measured at 25 °C
(3) All data referenced to sinusoidal commutation
(4) Peak torque duration at cold motor is 5 sec.
(5) Continuous stall torque is given for 5 rpm
(6) Winding temperature measured by using PT100 from one point.
Surface Measurement please check Temperature point drawing

Additional Note: For other performance data, please see torque/speed curves
Other torque - speed - voltage values are available.

SQM71-130 Performance Curves

SQM71-130 150 rpm nominal speed

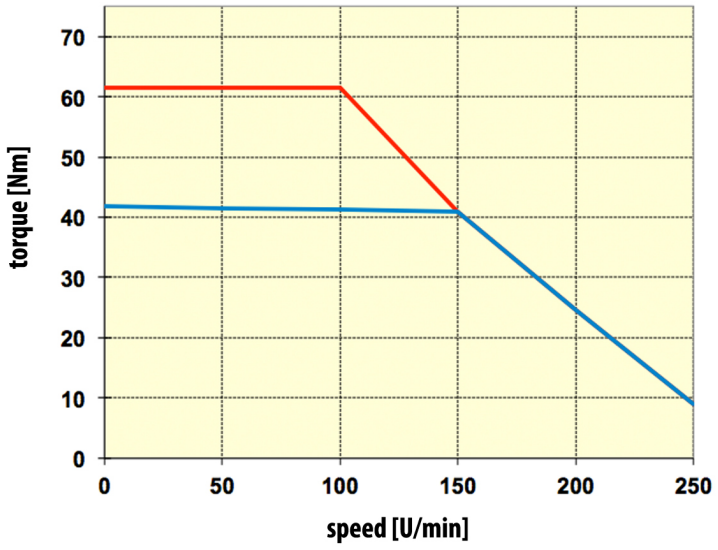

SQM71-130 250 rpm nominal speed

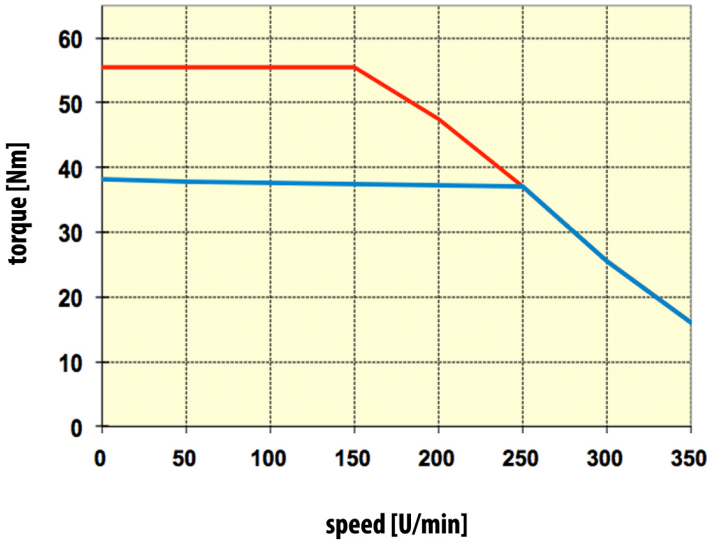

SQM71-130 500 rpm nominal speed

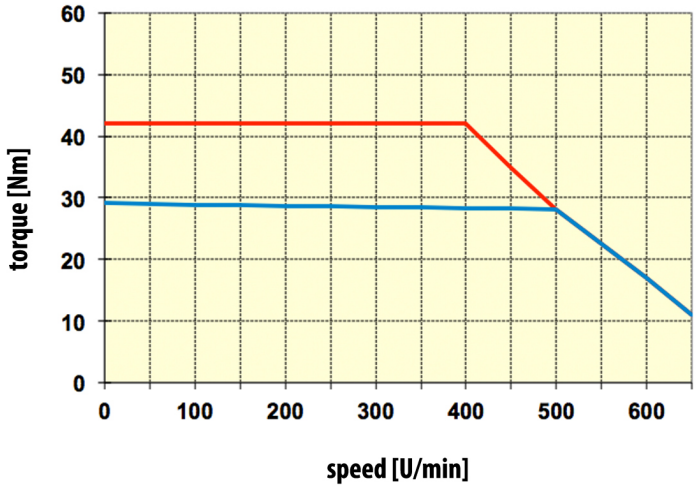

SQM71-130 750 rpm nominal speed

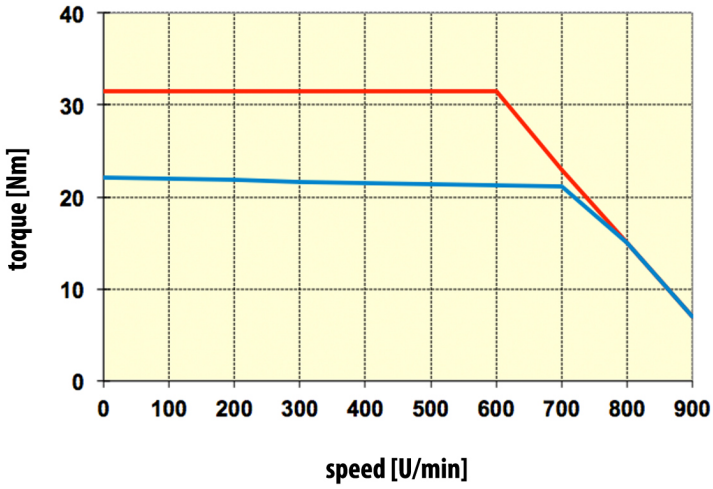

Mpeak cold motor | **Mpeak at Delta T=80k** | **Duty type: S3-40%, 1 min** | **Duty type: S3-60%, 1 min** | **Duty type: S1**

SQM71-170 Performance Data

Reference Data	Symbol	SQM71-170				Unit	Tol.
Frame Size		71					
Nominal Torque (80 K) (1)(3)(6)	M_N	56	51	39	28	Nm	
Nominal Speed	n_N	150	250	500	750	rpm	
Nominal Power (80 K) (1)(3)(6)	P_N	0,88	1,34	2,04	2,20	kW	
Nominal Current (80 K) (1)(3)(6)	I_N	4,4	6,3	7	6,2	A	
Design Voltage	U_{ac}	3 x 400				VAC	
	U_{bus}	560				VDC	
Nominal Frequency	f_N	85	142	283	425	Hz	
Pole Number	p	68					
Nominal Efficiency	η	81	86	90	92	%	
Moment of Inertia	J_{mot}	0,008917				kgm^2	
Duty		S1				-	
Protection class		IP54				-	
Isolation metarial class		H loaded to B				-	
Thermal Protection		PTO(Klixon) 120°C				-	
Cooling		IC 410 - Natural				-	
Colour		RAL 9005				-	
Weight		28,00				kg	
Feedback		Please see the option list				-	
Connection Type		STAR				-	
Limit Data							
Peak Torque at cold motor (4)	M_{pkc}	120,4	109,7	83,9	60,2	Nm	
Cont. stall torque (80 K) (1)(3)(6)	M_0	57,1	52,0	40,2	29,1	Nm	
Stall current (80 K) (1)(3)(6)	I_0	4,5	6,3	7,8	6,7	A	
Peak Torque (80 K) (1)(3)(6)	M_{max}	84,0	76,5	58,5	42,0	Nm	
Maximum Current (80 K) (1)(3)(6)	I_{max}	6,60	9,45	10,50	9,30	A	
Speed at Peak Torque	n_{pkT}	105	179	370	545	rpm	
Max. Speed	n_{max}	390	610	995	1120	rpm	
Torque at max. speed	M_{nmax}	5,6	5,1	3,9	2,8	Nm	
Thermal Time Constant	t_{th}	55	55	55	55	minutes	
Working Ambient Temp.		0 to 40				°C	
Storage Temp.		-30 to +85				°C	
Electrical Data							
Torque Constant (2)	k_T	12,73	8,10	5,57	4,52	Nm/A	+/-10%
E.M.F (ph-ph) (2)	U_E	1126	736	422	351	V/1000 rpm	+/-10%
Motor Constant (2)	k_M	5,33	5,23	6,19	5,90	Nm/√W	Nom
Winding Resistance (ph-ph) (2)	R_{ph}	3,8	1,6	0,54	0,39	Ω	+/-10%
Winding Inductance (ph-ph) (2)	L	140	60,5	19,8	13,7	mH	+/-10%

Notes:

(1) ΔT = 80 K; difference between winding-temperature and ambient-temperature = 80°C
(2) Electrical datas are measured at 25 °C
(3) All data referenced to sinusoidal commutation
(4) Peak torque duration at cold motor is 5 sec.
(5) Continuous stall torque is given for 5 rpm
(6) Winding temperature measured by using PT100 from one point.
Surface Measurement please check Temperature point drawing

Additional Note: For other performance data, please see torque/speed curves
Other torque - speed - voltage values are available.

SQM71-170 Performance Curves

SQM71-170 150 rpm nominal speed

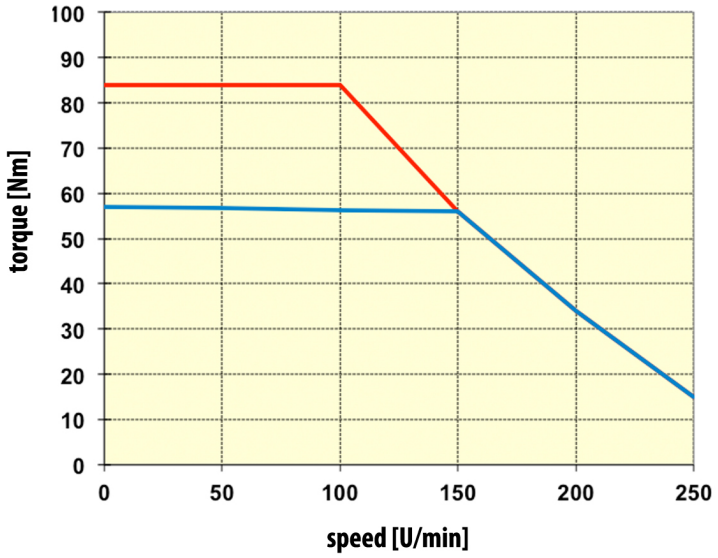

SQM71-170 250 rpm nominal speed

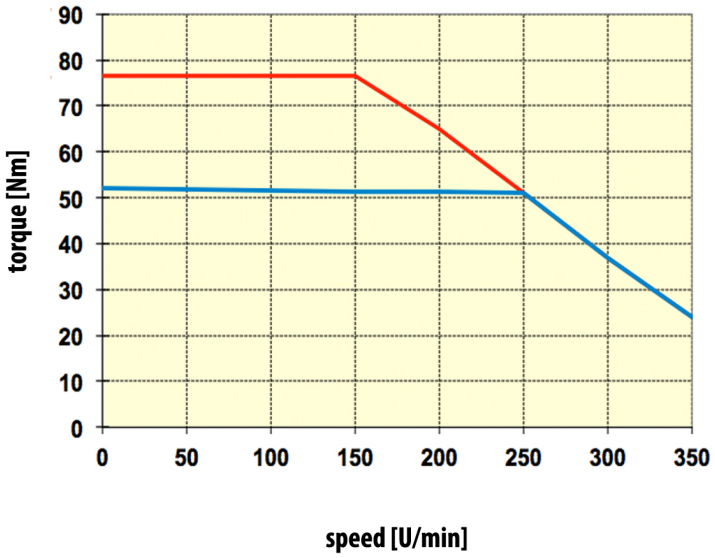

SQM71-170 500 rpm nominal speed

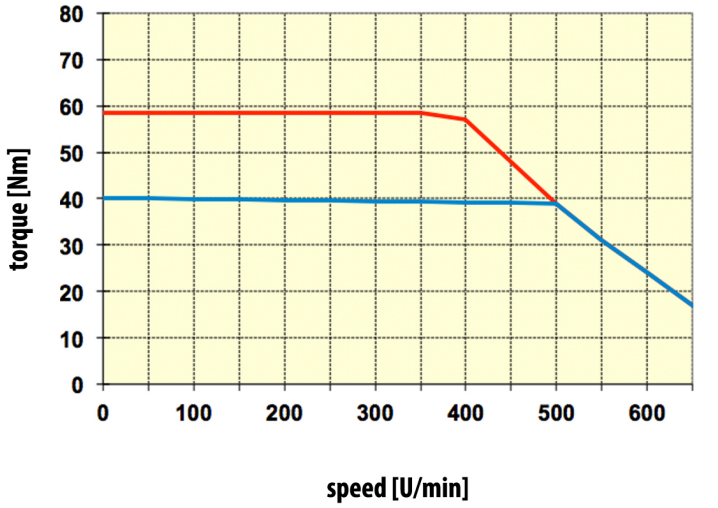

SQM71-170 750 rpm nominal speed

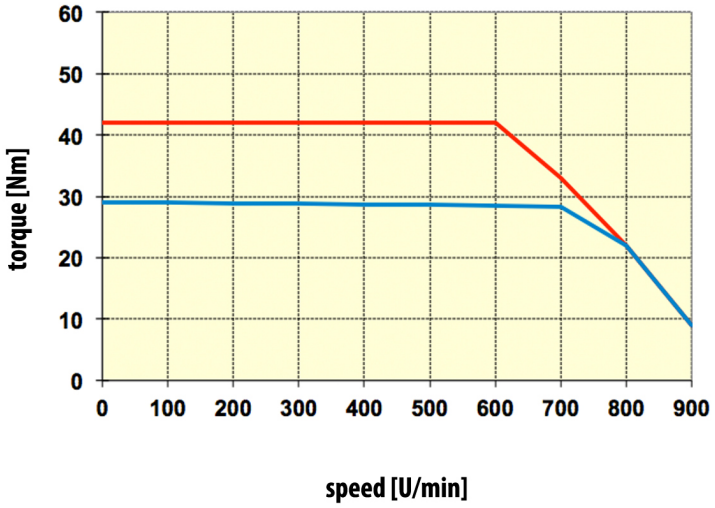

Mpeak cold motor | **Mpeak at Delta T=80k** | **Duty type: S3-40%, 1 min** | **Duty type: S3-60%, 1 min** | **Duty type: S1**

SQM80-150 Performance Data

Reference Data	Symbol	SQM80-150				Unit	Tol.
Frame Size		80					
Nominal Torque (80 K) (1)(3)(6)	M_N	70	59	47	34	Nm	
Nominal Speed	n_N	100	200	300	400	rpm	
Nominal Power (80 K) (1)(3)(6)	P_N	0,73	1,24	1,48	1,42	kW	
Nominal Current (80 K) (1)(3)(6)	I_N	3,4	4,9	4,9	3,7	A	
Design Voltage	U_{ac}	3 x 400				VAC	
	U_{bus}	560				VDC	
Nominal Frequency	f_N	57	113	170	227	Hz	
Pole Number	p	68					
Nominal Efficiency	η	81	83	85	88	%	
Moment of Inertia	J_{mot}	0,014969				kgm^2	
Duty		S1				-	
Protection class		IP54				-	
Isolation metarial class		H loaded to B				-	
Thermal Protection		PTO(Klixon) 120°C				-	
Cooling		IC 410 - Natural				-	
Colour		RAL 9005				-	
Weight		43,60				kg	
Feedback		Please see the option list				-	
Connection Type		DELTA				-	
Limit Data							
Peak Torque at cold motor (4)	M_{pkc}	150,5	126,9	101,1	73,1	Nm	
Cont. stall torque (80 K) (1)(3)(6)	M_0	71,0	60,3	48,03	34,75	Nm	
Stall current (80 K) (1)(3)(6)	I_0	4,4	6,3	6,4	4,8	A	
Peak Torque (80 K) (1)(3)(6)	M_{max}	105,0	88,5	70,5	51,0	Nm	
Maximum Current (80 K) (1)(3)(6)	I_{max}	5,10	7,35	7,35	5,55	A	
Speed at Peak Torque	n_{pkT}	68	138	217	298	rpm	
Max. Speed	n_{max}	305	530	665	702	rpm	
Torque at max. speed	M_{nmax}	7,0	5,9	4,7	3,4	Nm	
Thermal Time Constant	t_{th}	60	60	60	60	minutes	
Working Ambient Temp.		0 to 40				°C	
Storage Temp.		-30 to +85				°C	
Electrical Data							
Torque Constant (2)	k_T	20,59	12,04	9,59	9,19	Nm/A	+/-10%
E.M.F (ph-ph) (2)	U_E	1280	750	606	572	V/1000 rpm	+/-10%
Motor Constant (2)	k_M	8,29	8,46	8,04	8,50	Nm/√W	Nom
Winding Resistance (ph-ph) (2)	R_{ph}	4,11	1,35	0,95	0,78	Ω	+/-10%
Winding Inductance (ph-ph) (2)	L	284,6	96,85	63,5	56	mH	+/-10%

Notes:

(1) ΔT = 80 K; difference between winding-temperature and ambient-temperature = 80°C
(2) Electrical datas are measured at 25 °C
(3) All data referenced to sinusoidal commutation
(4) Peak torque duration at cold motor is 5 sec.
(5) Continuous stall torque is given for 5 rpm
(6) Winding temperature measured by using PT100 from one point.
Surface Measurement please check Temperature point drawing

Additional Note: For other performance data, please see torque/speed curves
Other torque - speed - voltage values are available.

SQM80-150 Performance Curves

SQM80-150 100 rpm nominal speed

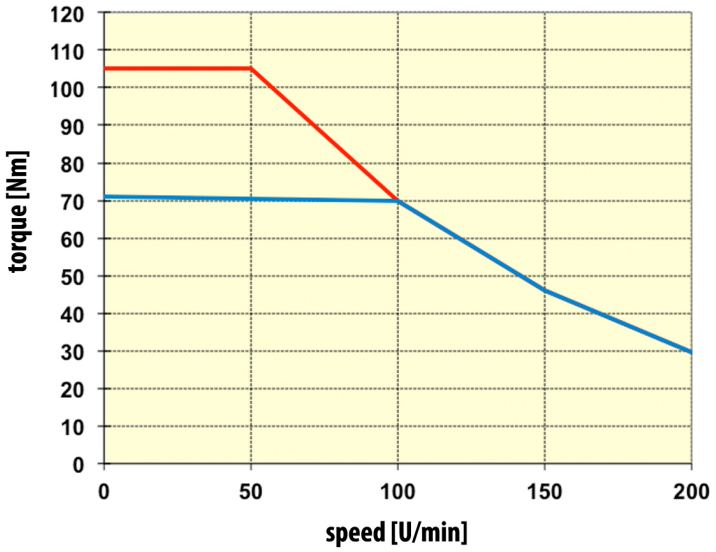

SQM80-150 200 rpm nominal speed

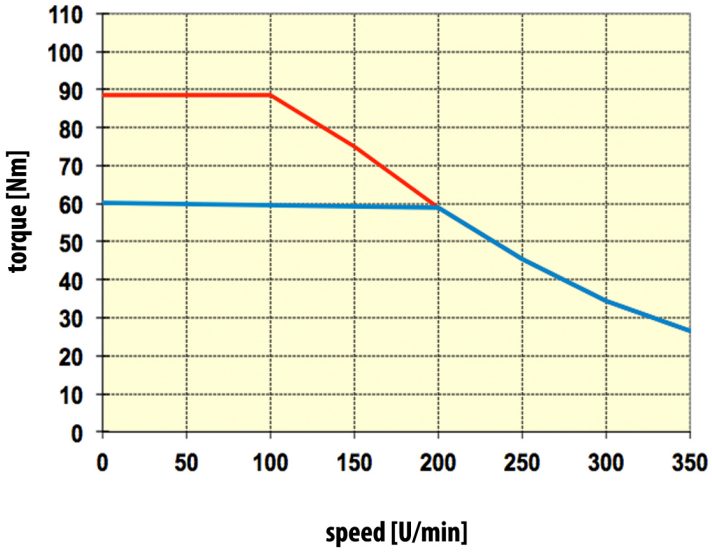

SQM80-150 300 rpm nominal speed

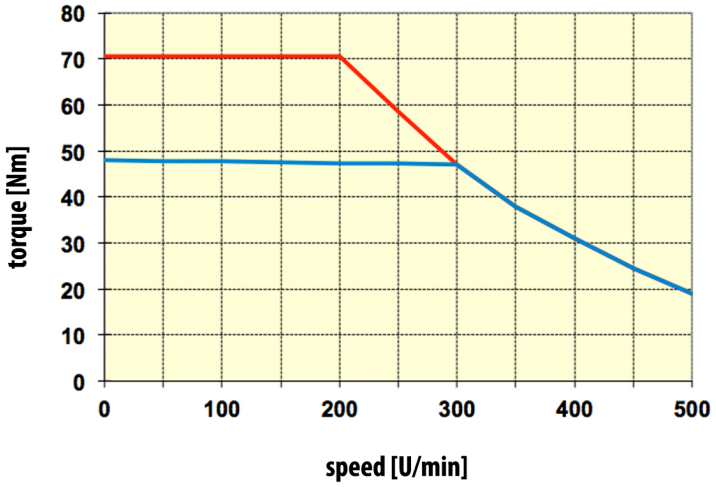

SQM80-150 400 rpm nominal speed

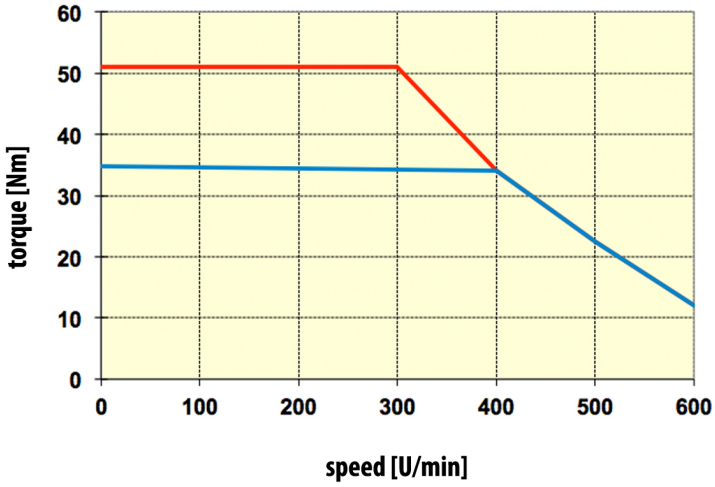

Mpeak cold motor | **Mpeak at Delta T=80k** | **Duty type: S3-40%, 1 min** | **Duty type: S3-60%, 1 min** | **Duty type: S1**

SQM80-200 Performance Data

Reference Data	Symbol	SQM80-200				Unit	Tol.
Frame Size		80					
Nominal Torque (80 K) (1)(3)(6)	M_N	90	78	62	45	Nm	
Nominal Speed	n_N	100	200	300	400	rpm	
Nominal Power (80 K) (1)(3)(6)	P_N	0,94	1,63	1,95	1,88	kW	
Nominal Current (80 K) (1)(3)(6)	I_N	4,2	6,3	6,3	4,9	A	
Design Voltage	U_{ac}	3 x 400				VAC	
	U_{bus}	560				VDC	
Nominal Frequency	f_N	57	113	170	227	Hz	
Pole Number	p	68					
Nominal Efficiency	η	82	84	86	88	%	
Moment of Inertia	J_{mot}	0,019623				kgm^2	
Duty		S1				-	
Protection class		IP54				-	
Isolation metarial class		H loaded to B				-	
Thermal Protection		PTO(Klixon) 120°C				-	
Cooling		IC 410 - Natural				-	
Colour		RAL 9005				-	
Weight		54,00				kg	
Feedback		Please see the option list				-	
Connection Type		DELTA				-	
Limit Data							
Peak Torque at cold motor (4)	M_{pkc}	193,5	167,7	133,3	96,8	Nm	
Cont. stall torque (80 K) (1)(3)(6)	M_0	91,98	79,72	63,36	45,99	Nm	
Stall current (80 K) (1)(3)(6)	I_0	5,5	8,2	8,3	6,3	A	
Peak Torque (80 K) (1)(3)(6)	M_{max}	135,0	117,0	93,0	67,5	Nm	
Maximum Current (80 K) (1)(3)(6)	I_{max}	6,30	9,45	9,45	7,35	A	
Speed at Peak Torque	n_{pkT}	69	138	213	296	rpm	
Max. Speed	n_{max}	295	517	657	695	rpm	
Torque at max. speed	M_{nmax}	9,0	7,8	6,2	4,5	Nm	
Thermal Time Constant	t_{th}	60	60	60	60	minutes	
Working Ambient Temp.		0 to 40				°C	
Storage Temp.		-30 to +85				°C	
Electrical Data							
Torque Constant (2)	k_T	21,43	12,38	9,84	9,18	Nm/A	+/-10%
E.M.F (ph-ph) (2)	U_E	1330	760	620	572	V/1000 rpm	+/-10%
Motor Constant (2)	k_M	10,42	10,43	9,97	10,30	Nm/√W	Nom
Winding Resistance (ph-ph) (2)	R_{ph}	2,82	0,94	0,65	0,53	Ω	+/-10%
Winding Inductance (ph-ph) (2)	L	229,6	74,97	49,5	42,2	mH	+/-10%

Notes:

(1) ΔT = 80 K; difference between winding-temperature and ambient-temperature = 80°C
(2) Electrical datas are measured at 25 °C
(3) All data referenced to sinusoidal commutation
(4) Peak torque duration at cold motor is 5 sec.
(5) Continuous stall torque is given for 5 rpm
(6) Winding temperature measured by using PT100 from one point.
Surface Measurement please check Temperature point drawing

Additional Note: For other performance data, please see torque/speed curves
Other torque - speed - voltage values are available.

SQM80-200 Performance Curves

SQM80-200 100 rpm nominal speed

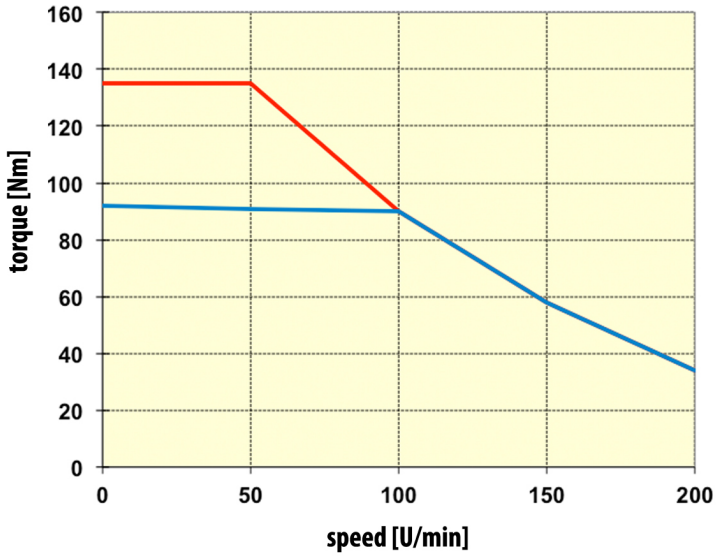

SQM80-200 200 rpm nominal speed

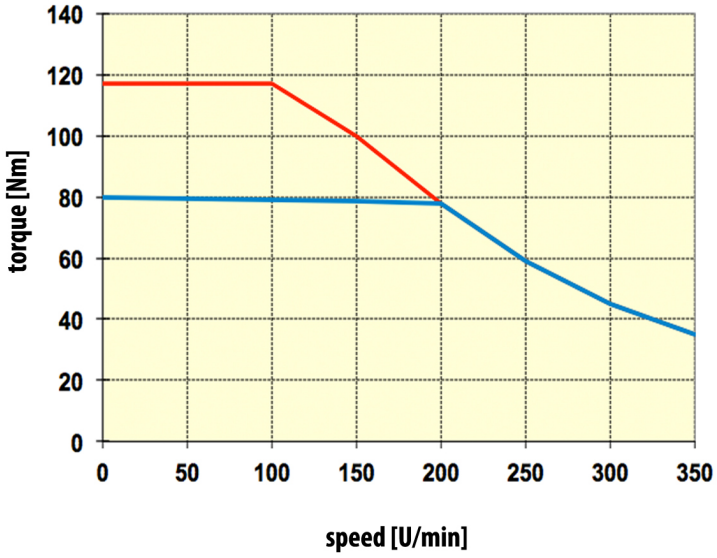

SQM80-200 300 rpm nominal speed

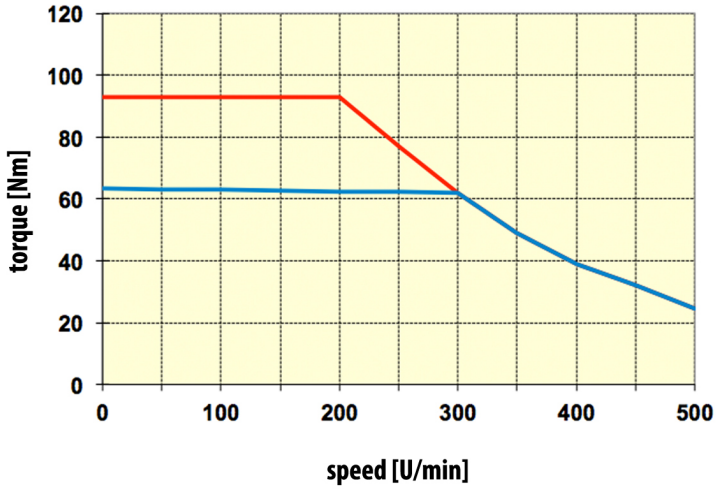

SQM80-200 400 rpm nominal speed

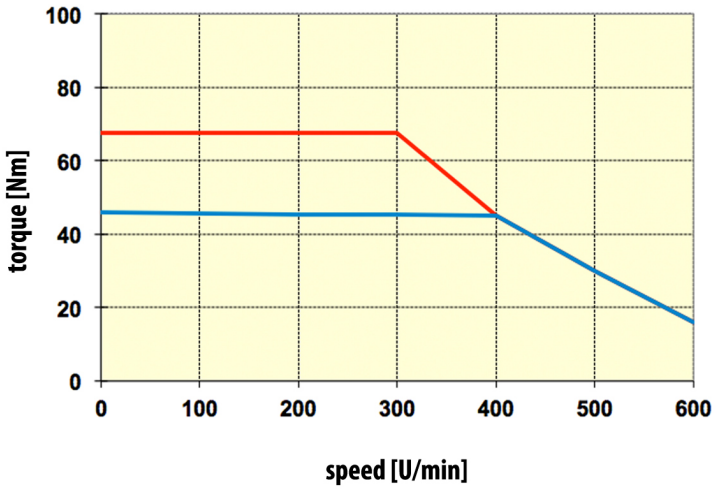

Mpeak cold motor | Mpeak at Delta T=80k | Duty type: S3-40%, 1 min | Duty type: S3-60%, 1 min | Duty type: S1

SQM80-240 Performance Data

Reference Data	Symbol	SQM80-240				Unit	Tol.
Frame Size		80					
Nominal Torque (80 K) (1)(3)(6)	M_N	105	90	70	53	Nm	
Nominal Speed	n_N	100	200	300	400	rpm	
Nominal Power (80 K) (1)(3)(6)	P_N	1,10	1,88	2,20	2,22	kW	
Nominal Current (80 K) (1)(3)(6)	I_N	4,7	7,2	6,8	5,5	A	
Design Voltage	U_{ac}	3 x 400				VAC	
	U_{bus}	560				VDC	
Nominal Frequency	f_N	57	113	170	227	Hz	
Pole Number	p	68					
Nominal Efficiency	η	83	87	89	91	%	
Moment of Inertia	J_{mot}	0,023346				kgm^2	
Duty		S1				-	
Protection class		IP54				-	
Isolation metarial class		H loaded to B				-	
Thermal Protection		PTO(Klixon) 120°C				-	
Cooling		IC 410 - Natural				-	
Colour		RAL 9005				-	
Weight		62,30				kg	
Feedback		Please see the option list				-	
Connection Type		DELTA				-	
Limit Data							
Peak Torque at cold motor (4)	M_{pkc}	225,8	193,5	150,5	114,0	Nm	
Cont. stall torque (80 K) (1)(3)(6)	M_0	107,3	92,0	71,5	54,2	Nm	
Stall current (80 K) (1)(3)(6)	I_0	6,2	9,2	8,9	7,1	A	
Peak Torque (80 K) (1)(3)(6)	M_{max}	157,5	135,0	105,0	79,5	Nm	
Maximum Current (80 K) (1)(3)(6)	I_{max}	7,05	10,80	10,20	8,25	A	
Speed at Peak Torque	n_{pkT}	69	138	215	293	rpm	
Max. Speed	n_{max}	288	502	630	675	rpm	
Torque at max. speed	M_{nmax}	10,5	9,0	7,0	5,3	Nm	
Thermal Time Constant	t_{th}	60	60	60	60	minutes	
Working Ambient Temp.		0 to 40				°C	
Storage Temp.		-30 to +85				°C	
Electrical Data							
Torque Constant (2)	k_T	22,34	12,50	10,29	9,64	Nm/A	+/-10%
E.M.F (ph-ph) (2)	U_E	1370	800	630	572	V/1000 rpm	+/-10%
Motor Constant (2)	k_M	11,56	11,41	11,89	11,60	Nm/√W	Nom
Winding Resistance (ph-ph) (2)	R_{ph}	2,49	0,8	0,5	0,46	Ω	+/-10%
Winding Inductance (ph-ph) (2)	L	202,4	68,9	42,5	35,1	mH	+/-10%

Notes:

(1) ΔT = 80 K; difference between winding-temperature and ambient-temperature = 80°C
(2) Electrical datas are measured at 25 °C
(3) All data referenced to sinusoidal commutation
(4) Peak torque duration at cold motor is 5 sec.
(5) Continuous stall torque is given for 5 rpm
(6) Winding temperature measured by using PT100 from one point.
Surface Measurement please check Temperature point drawing

Additional Note: For other performance data, please see torque/speed curves
Other torque - speed - voltage values are available.

SQM80-240 Performance Curves

SQM80-240 100 rpm nominal speed

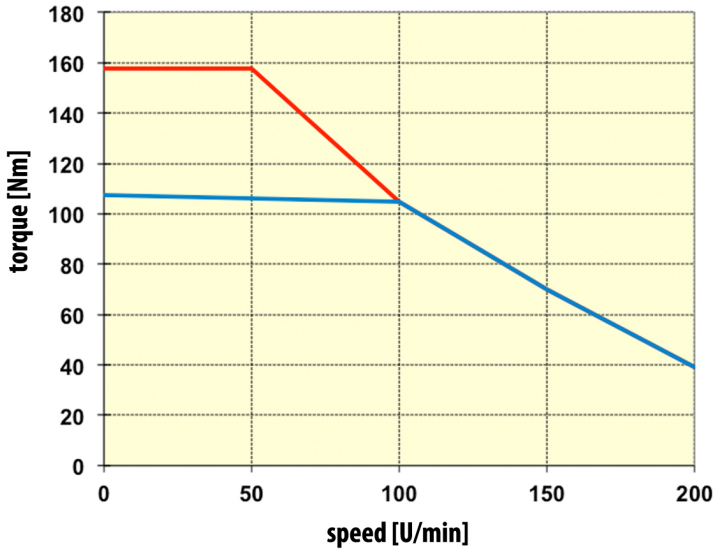

SQM80-240 200 rpm nominal speed

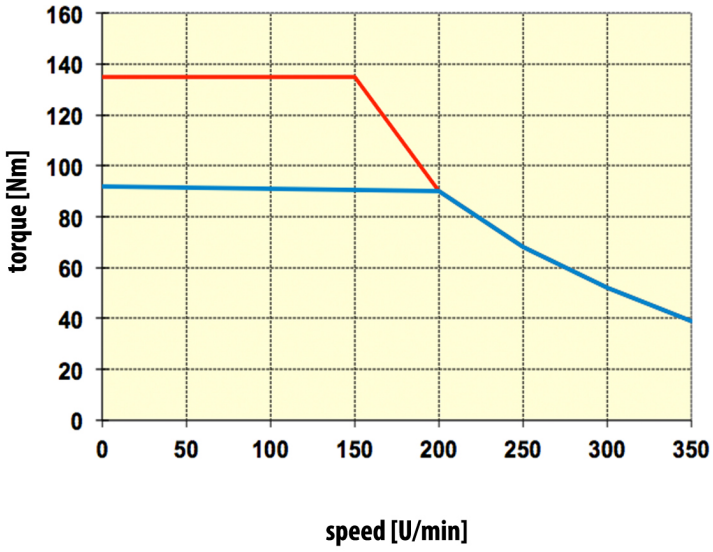

SQM80-240 300 rpm nominal speed

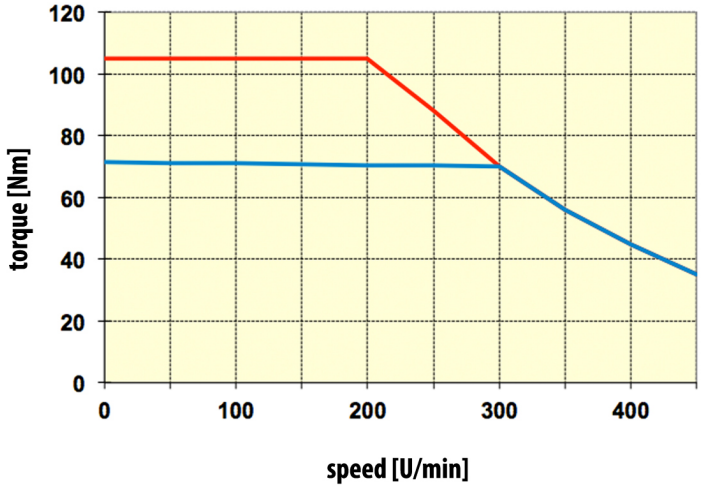

SQM80-240 400 rpm nominal speed

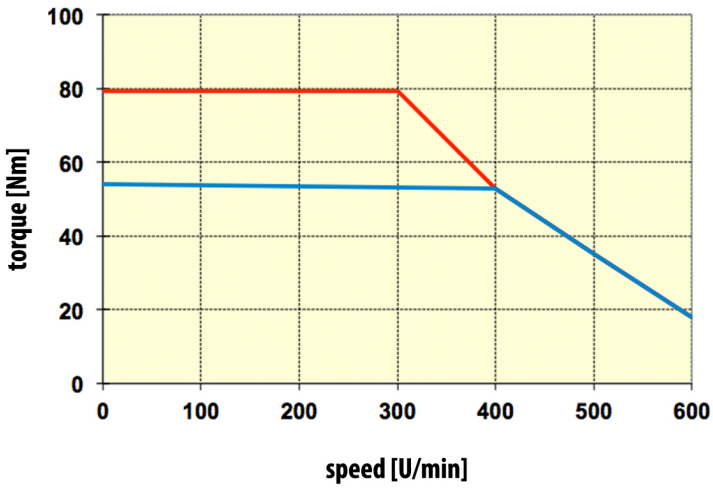

Mpeak cold motor | Mpeak at Delta T=80k | Duty type: S3-40%, 1 min | Duty type: S3-60%, 1 min | Duty type: S1

SQM100-140 Performance Data

Reference Data	Symbol	SQM100-140				Unit	Tol.
Frame Size		100					
Nominal Torque (80 K)[1][3][6]	M_N	140	108	98	83	Nm	
Nominal Speed	n_N	100	200	300	400	rpm	
Nominal Power (80 K)[1][3][6]	P_N	1,47	2,26	3,08	3,48	kW	
Nominal Current (80 K)[1][3][6]	I_N	4	5,3	6,7	7	A	
Design Voltage	U_{ac}	3 x 400				VAC	
	U_{bus}	560				VDC	
Nominal Frequency	f_N	55	110	165	220	Hz	
Pole Number	p	66					
Nominal Efficiency	η	86	90	92	93	%	
Moment of Inertia	J_{mot}	0,036692				kgm^2	
Duty		S1				-	
Protection class		IP54				-	
Isolation metarial class		H loaded to B				-	
Thermal Protection		PTO(Klixon) 120°C				-	
Cooling		IC 410 - Natural				-	
Colour		RAL 9005				-	
Weight		60,40				kg	
Feedback		Please see the option list				-	
Connection Type		STAR				-	
Limit Data							
Peak Torque at cold motor [4]	M_{pkc}	301,0	232,2	210,7	178,5	Nm	
Cont. stall torque (80 K) [1][3][6]	M_0	142,8	110,2	100,9	85,5	Nm	
Stall current (80 K) [1][3][6]	I_0	4	5,3	6,7	6,7	A	
Peak Torque (80 K) [1][3][6]	M_{max}	210,0	162,0	147,0	124,5	Nm	
Maximum Current (80 K) [1][3][6]	I_{max}	6,00	7,95	10,05	10,50	A	
Speed at Peak Torque	n_{pkT}	62	155	240	330	rpm	
Max. Speed	n_{max}	175	290	410	510	rpm	
Torque at max. speed	M_{nmax}	14,0	10,8	9,8	8,3	Nm	
Thermal Time Constant	t_{th}	70	70	70	70	minutes	
Working Ambient Temp.		0 to 40				°C	
Storage Temp.		-30 to +85				°C	
Electrical Data							
Torque Constant [2]	k_T	35,00	20,38	14,63	11,86	Nm/A	+/-10%
E.M.F (ph-ph) [2]	U_E	2160	1265	900	695	V/1000 rpm	+/-10%
Motor Constant [2]	k_M	11,48	11,59	11,77	12,01	Nm/√W	Nom
Winding Resistance (ph-ph) [2]	R_{ph}	6,2	2,06	1,03	0,65	Ω	+/-10%
Winding Inductance (ph-ph) [2]	L	239,8	82	41,3	24,7	mH	+/-10%

Notes:

(1) ΔT = 80 K; difference between winding-temperature and ambient-temperature = 80°C
(2) Electrical datas are measured at 25 °C
(3) All data referenced to sinusoidal commutation
(4) Peak torque duration at cold motor is 5 sec.
(5) Continuous stall torque is given for 5 rpm
(6) Winding temperature measured by using PT100 from one point.
Surface Measurement please check Temperature point drawing

Additional Note: For other performance data, please see torque/speed curves
Other torque - speed - voltage values are available.

SQM100-140 Performance Curves

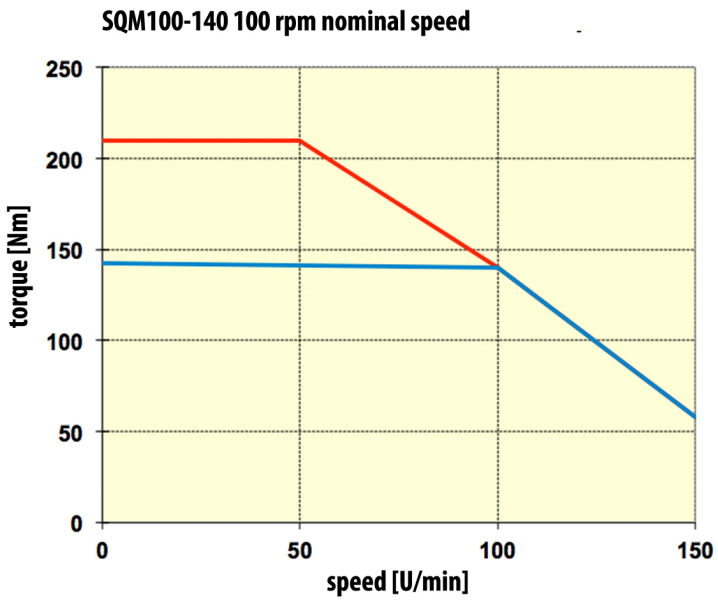

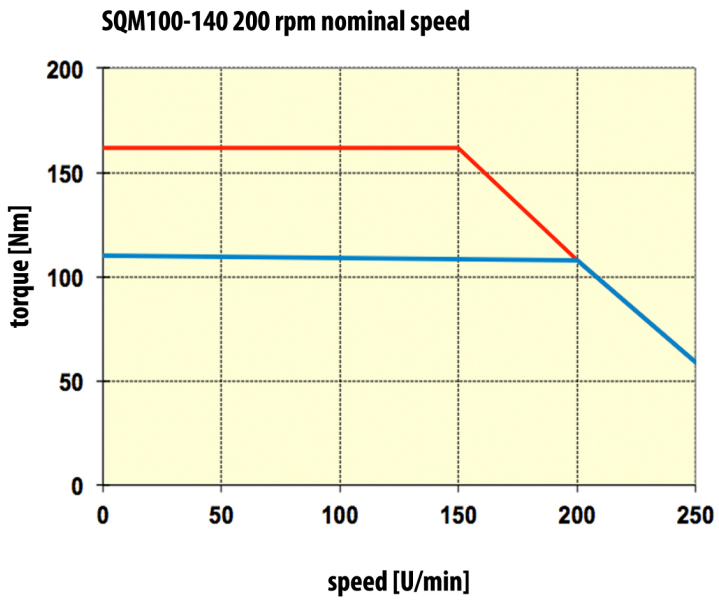

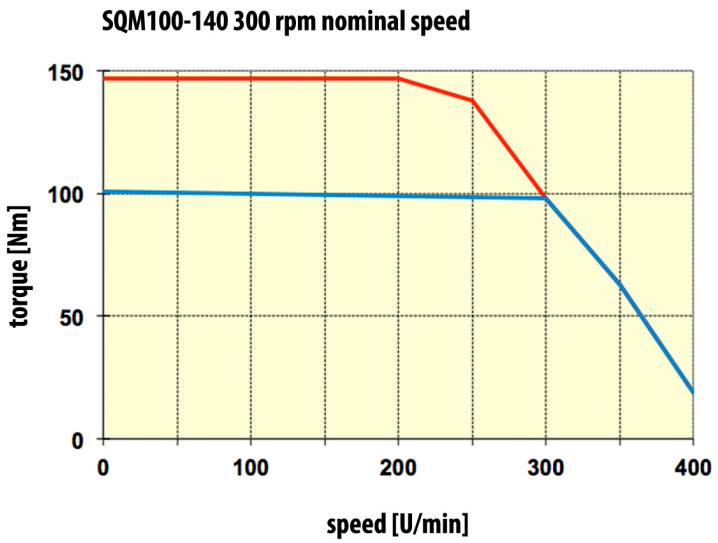

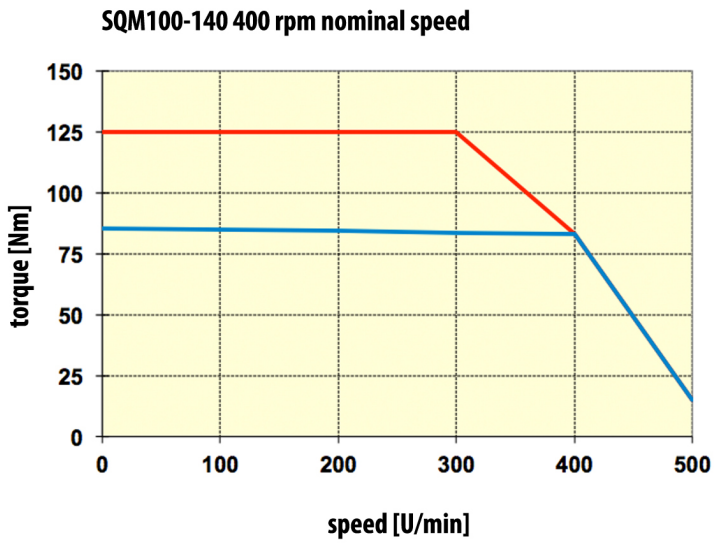

Mpeak cold motor | Mpeak at Delta T=80k | Duty type: S3-40%, 1 min | Duty type: S3-60%, 1 min | Duty type: S1

SQM100-200 Performance Data

Reference Data	Symbol	SQM100-200				Unit	Tol.
Frame Size		100					
Nominal Torque (80 K) (1)(3)(6)	M_N	200	160	133	108	Nm	
Nominal Speed	n_N	100	200	300	400	rpm	
Nominal Power (80 K) (1)(3)(6)	P_N	2,09	3,35	4,18	4,52	kW	
Nominal Current (80 K) (1)(3)(6)	I_N	5,7	8,1	8,8	8,8	A	
Design Voltage	U_{ac}	3 x 400				VAC	
	U_{bus}	560				VDC	
Nominal Frequency	f_N	55	110	165	220	Hz	
Pole Number	p	66					
Nominal Efficiency	η	88	91	93	94	%	
Moment of Inertia	J_{mot}	0,051189				kgm^2	
Duty		S1				-	
Protection class		IP54				-	
Isolation metarial class		H loaded to B				-	
Thermal Protection		PTO(Klixon) 120°C				-	
Cooling		IC 410 - Natural				-	
Colour		RAL 9005				-	
Weight		78,20				kg	
Feedback		Please see the option list				-	
Connection Type		STAR				-	
Limit Data							
Peak Torque at cold motor (4)	M_{pkc}	430,0	344,0	286,0	232,2	Nm	
Cont. stall torque (80 K) (1)(3)(6)	M_0	202,0	161,6	135,7	110,2	Nm	
Stall current (80 K) (1)(3)(6)	I_0	5,7	8,1	8,8	8,8	A	
Peak Torque (80 K) (1)(3)(6)	M_{max}	300,0	240,0	199,5	162,0	Nm	
Maximum Current (80 K) (1)(3)(6)	I_{max}	8,55	12,15	13,20	13,20	A	
Speed at Peak Torque	n_{pkT}	73	155	240	335	rpm	
Max. Speed	n_{max}	176	305	405	500	rpm	
Torque at max. speed	M_{nmax}	20,0	16,0	13,3	10,8	Nm	
Thermal Time Constant	t_{th}	70	70	70	70	minutes	
Working Ambient Temp.		0 to 40				°C	
Storage Temp.		-30 to +85				°C	
Electrical Data							
Torque Constant (2)	k_T	35,09	19,75	15,11	12,27	Nm/A	+/-10%
E.M.F (ph-ph) (2)	U_E	2160	1225	933	758	V/1000 rpm	+/-10%
Motor Constant (2)	k_M	15,54	15,38	15,55	15,65	Nm/√W	Nom
Winding Resistance (ph-ph) (2)	R_{ph}	3,4	1,1	0,63	0,41	Ω	+/-10%
Winding Inductance (ph-ph) (2)	L	167	53,8	31,2	20,6	mH	+/-10%

Notes:

(1) ΔT = 80 K; difference between winding-temperature and ambient-temperature = 80°C
(2) Electrical datas are measured at 25 °C
(3) All data referenced to sinusoidal commutation
(4) Peak torque duration at cold motor is 5 sec.
(5) Continuous stall torque is given for 5 rpm
(6) Winding temperature measured by using PT100 from one point.
Surface Measurement please check Temperature point drawing

Additional Note: For other performance data, please see torque/speed curves
Other torque - speed - voltage values are available.

SQM100-200 Performance Curves

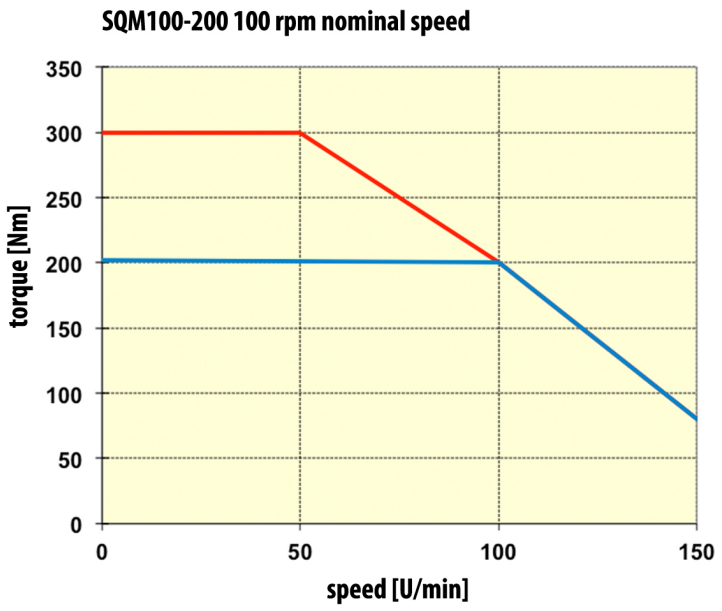

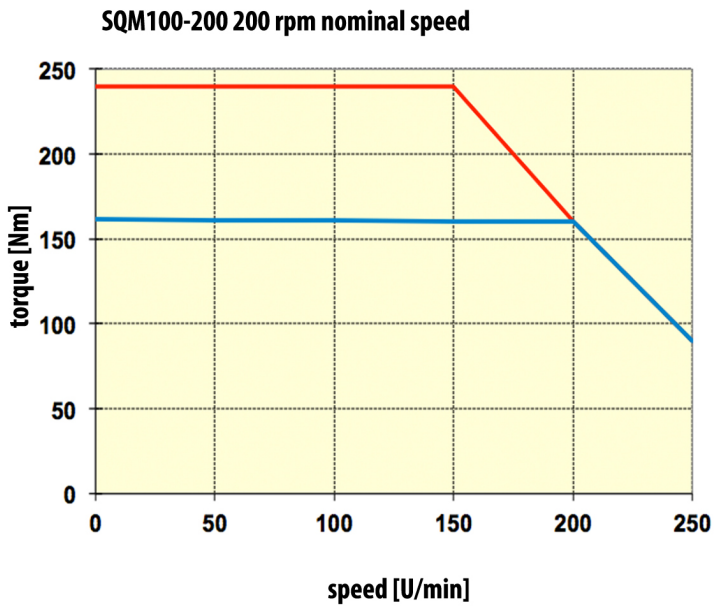

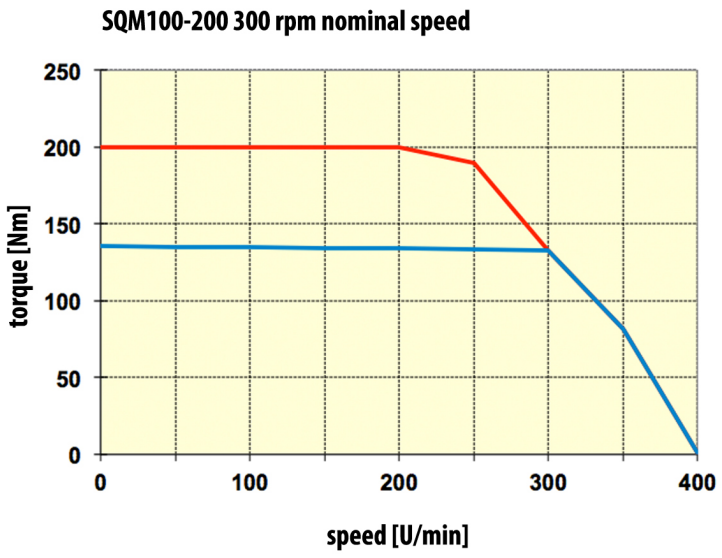

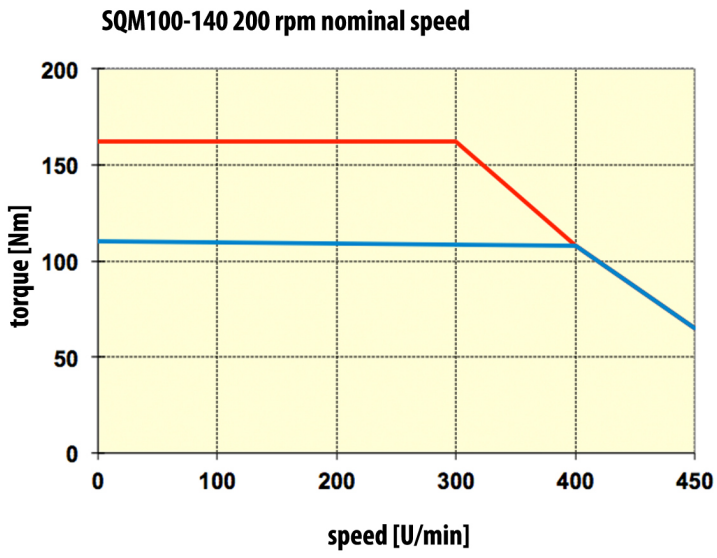

Mpeak cold motor | Mpeak at Delta T=80k | Duty type: S3-40%, 1 min | Duty type: S3-60%, 1 min | Duty type: S1

SQM100-240 Performance Data

Reference Data	Symbol	SQM100-240				Unit	Tol.
Frame Size		100					
Nominal Torque (80 K) (1)(3)(6)	M_N	220	180	156	125	Nm	
Nominal Speed	n_N	100	200	300	400	rpm	
Nominal Power (80 K) (1)(3)(6)	P_N	2,30	3,77	4,90	5,24	kW	
Nominal Current (80 K) (1)(3)(6)	I_N	6,2	8,8	9,5	9,7	A	
Design Voltage	U_{ac}	3 x 400				VAC	
	U_{bus}	560				VDC	
Nominal Frequency	f_N	55	110	165	220	Hz	
Pole Number	p	66					
Nominal Efficiency	η	88	93	94	94	%	
Moment of Inertia	J_{mot}	0,060847				kgm^2	
Duty		S1				-	
Protection class		IP54				-	
Isolation metarial class		H loaded to B				-	
Thermal Protection		PTO(Klixon) 120°C				-	
Cooling		IC 410 - Natural				-	
Colour		RAL 9005				-	
Weight		90,00				kg	
Feedback		Please see the option list				-	
Connection Type		STAR				-	
Limit Data							
Peak Torque at cold motor (4)	M_{pkc}	473,0	387,0	335,4	268,8	Nm	
Cont. stall torque (80 K) (1)(3)(6)	M_0	222,2	181,8	157,6	126,3	Nm	
Stall current (80 K) (1)(3)(6)	I_0	6,2	8,8	9,5	9,7	A	
Peak Torque (80 K) (1)(3)(6)	M_{max}	330,0	270,0	234,0	187,5	Nm	
Maximum Current (80 K) (1)(3)(6)	I_{max}	9,30	13,20	14,25	14,55	A	
Speed at Peak Torque	n_{pkT}	75	155	240	340	rpm	
Max. Speed	n_{max}	170	290	400	500	rpm	
Torque at max. speed	M_{nmax}	22,0	18,0	15,6	12,5	Nm	
Thermal Time Constant	t_{th}	70	70	70	70	minutes	
Working Ambient Temp.		0 to 40				°C	
Storage Temp.		-30 to +85				°C	
Electrical Data							
Torque Constant (2)	k_T	35,48	20,45	16,42	12,89	Nm/A	+/-10%
E.M.F (ph-ph) (2)	U_E	2310	1260	910	770	V/1000 rpm	+/-10%
Motor Constant (2)	k_M	15,81	17,45	19,99	18,32	Nm/√W	Nom
Winding Resistance (ph-ph) (2)	R_{ph}	3,36	0,916	0,45	0,33	Ω	+/-10%
Winding Inductance (ph-ph) (2)	L	159,4	47,4	24,7	17,7	mH	+/-10%

Notes:

(1) ΔT = 80 K; difference between winding-temperature and ambient-temperature = 80°C
(2) Electrical datas are measured at 25 °C
(3) All data referenced to sinusoidal commutation
(4) Peak torque duration at cold motor is 5 sec.
(5) Continuous stall torque is given for 5 rpm
(6) Winding temperature measured by using PT100 from one point.
Surface Measurement please check Temperature point drawing

Additional Note: For other performance data, please see torque/speed curves
Other torque - speed - voltage values are available.

SQM100-240 Performance Curves

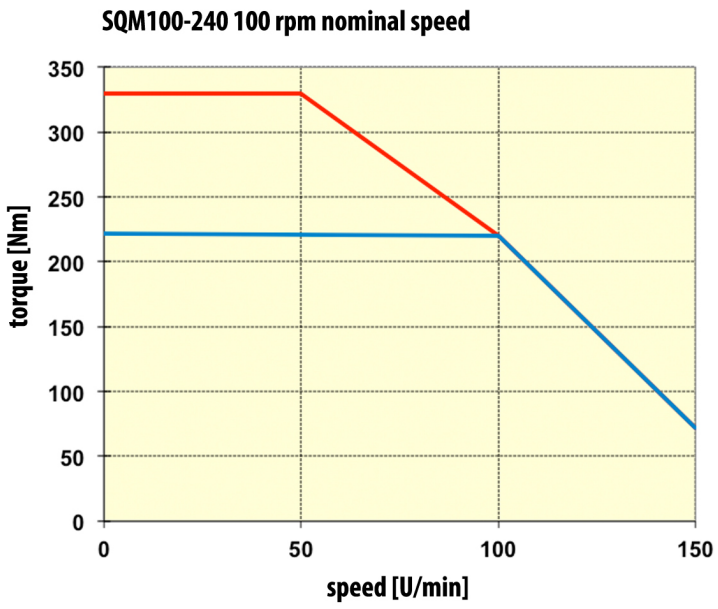

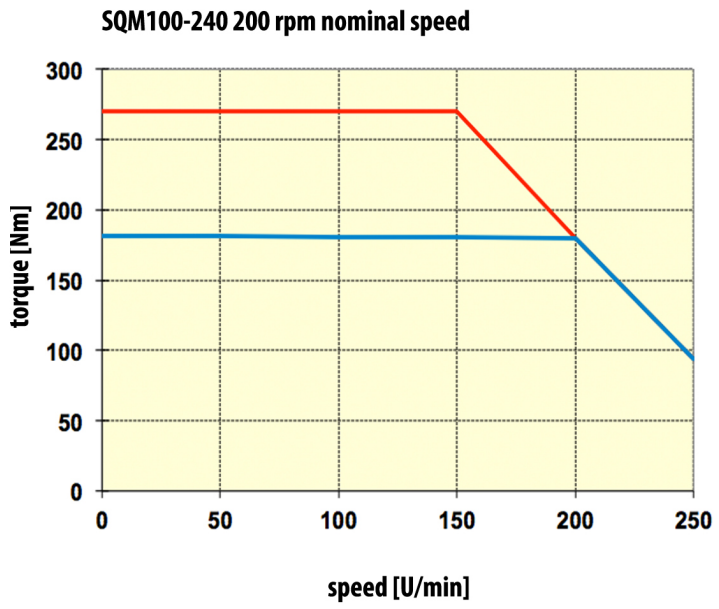

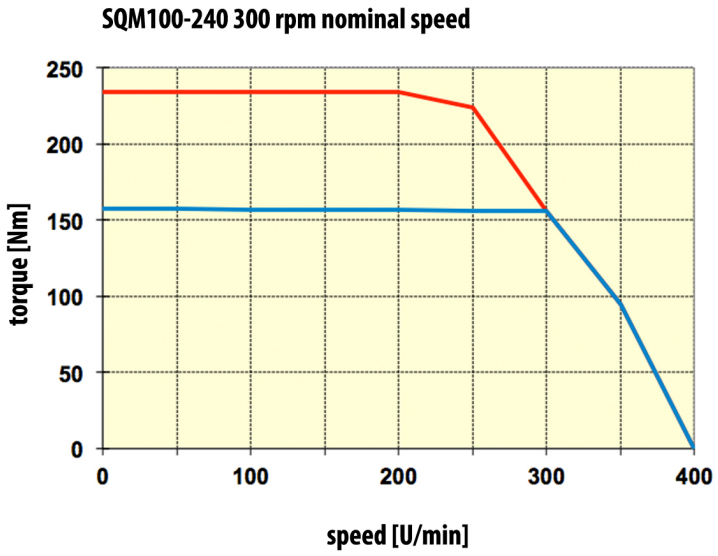

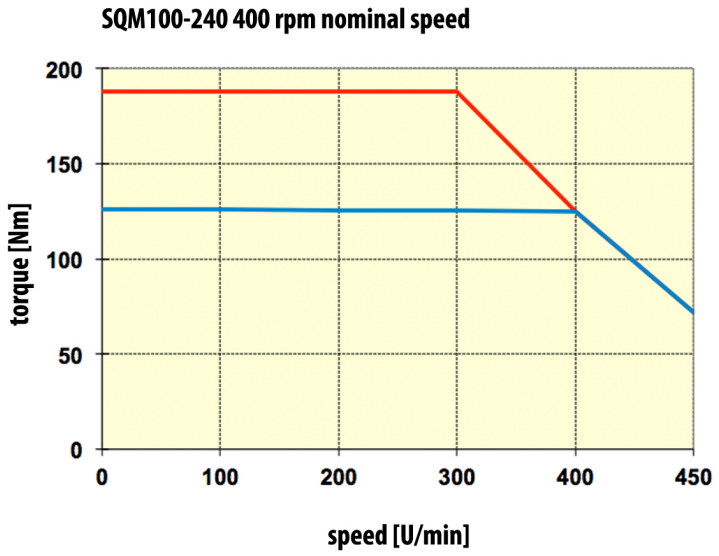

Mpeak cold motor | Mpeak at Delta T=80k | Duty type: S3-40%, 1 min | Duty type: S3-60%, 1 min | Duty type: S1

SQM132-140 Performance Data

Reference Data	Symbol	SQM132-140				Unit	Tol.
Frame Size		132					
Nominal Torque (80 K) (1)(3)(6)	M_N	250	220	175	140	Nm	
Nominal Speed	n_N	100	200	300	400	rpm	
Nominal Power (80 K) (1)(3)(6)	P_N	2,62	4,61	5,50	5,86	kW	
Nominal Current (80 K) (1)(3)(6)	I_N	7,2	11,5	12	11,8	A	
Design Voltage	U_{ac}	3 x 400				VAC	
	U_{bus}	560				VDC	
Nominal Frequency	f_N	55	110	165	220	Hz	
Pole Number	p	66					
Nominal Efficiency	η	82	87	90	92	%	
Moment of Inertia	J_{mot}	0,1668				kgm^2	
Duty		S1				-	
Protection class		IP54				-	
Isolation metarial class		H loaded to B				-	
Thermal Protection		PTO(Klixon) 120°C				-	
Cooling		IC 410 - Natural				-	
Colour		RAL 9005				-	
Weight		145,00				kg	
Feedback		Please see the option list				-	
Connection Type		STAR				-	
Limit Data							
Peak Torque at cold motor (4)	M_{pkc}	537,5	473,0	376,3	301,0	Nm	
Cont. stall torque (80 K) (1)(3)(6)	M_0	250,8	220,7	175,9	141,4	Nm	
Stall current (80 K) (1)(3)(6)	I_0	7,2	11,5	12	11,8	A	
Peak Torque (80 K) (1)(3)(6)	M_{max}	375,0	330,0	262,5	210,0	Nm	
Maximum Current (80 K) (1)(3)(6)	I_{max}	10,80	17,25	18,00	17,70	A	
Speed at Peak Torque	n_{pkT}	75	154	240	335	rpm	
Max. Speed	n_{max}	170	301	400	487	rpm	
Torque at max. speed	M_{nmax}	25,0	22,0	17,5	14,0	Nm	
Thermal Time Constant	t_{th}	90	90	90	90	minutes	
Working Ambient Temp.		0 to 40				°C	
Storage Temp.		-30 to +85				°C	
Electrical Data							
Torque Constant (2)	k_T	34,72	19,13	14,58	11,86	Nm/A	+/-10%
E.M.F (ph-ph) (2)	U_E	2530	1400	1000	800	V/1000 rpm	+/-10%
Motor Constant (2)	k_M	18,30	17,92	19,32	19,77	Nm/√W	Nom
Winding Resistance (ph-ph) (2)	R_{ph}	2,4	0,76	0,38	0,24	Ω	+/-10%
Winding Inductance (ph-ph) (2)	L	116	35,5	18,1	11,6	mH	+/-10%

Notes:

(1) ΔT = 80 K; difference between winding-temperature and ambient-temperature = 80°C
(2) Electrical datas are measured at 25 °C
(3) All data referenced to sinusoidal commutation
(4) Peak torque duration at cold motor is 5 sec.
(5) Continuous stall torque is given for 5 rpm
(6) Winding temperature measured by using PT100 from one point.
Surface Measurement please check Temperature point drawing

Additional Note: For other performance data, please see torque/speed curves
Other torque - speed - voltage values are available.

SQM132-140 Performance Curves

SQM132-140 100 rpm nominal speed

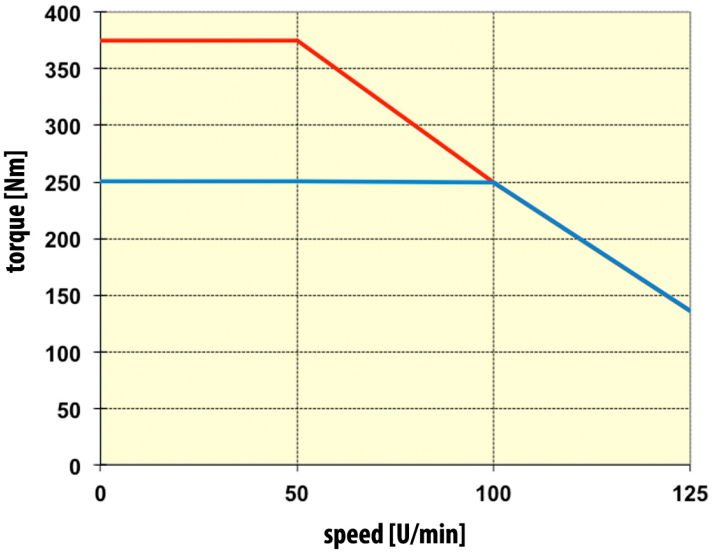

SQM132-140 200 rpm nominal speed

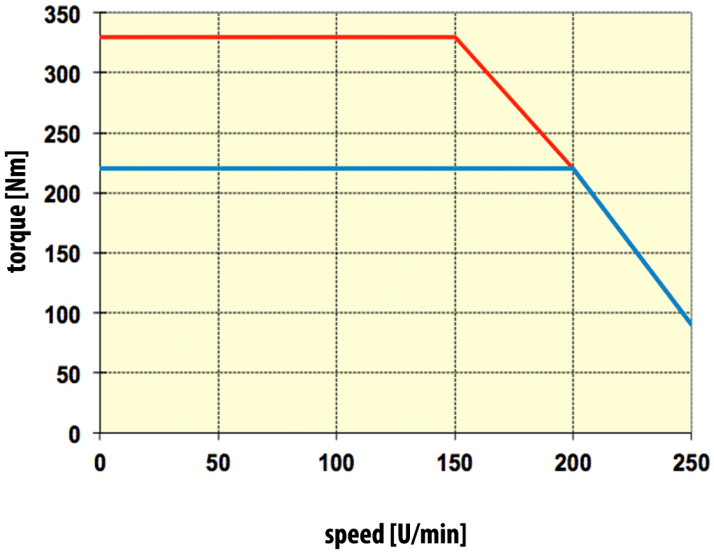

SQM132-140 300 rpm nominal speed

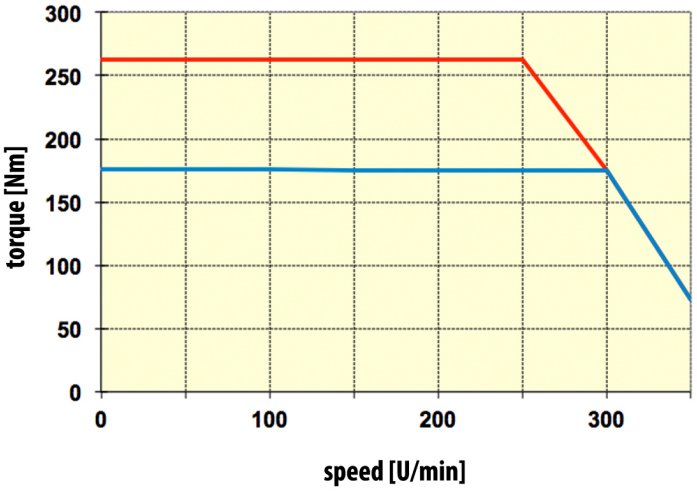

SQM132-140 400 rpm nominal speed

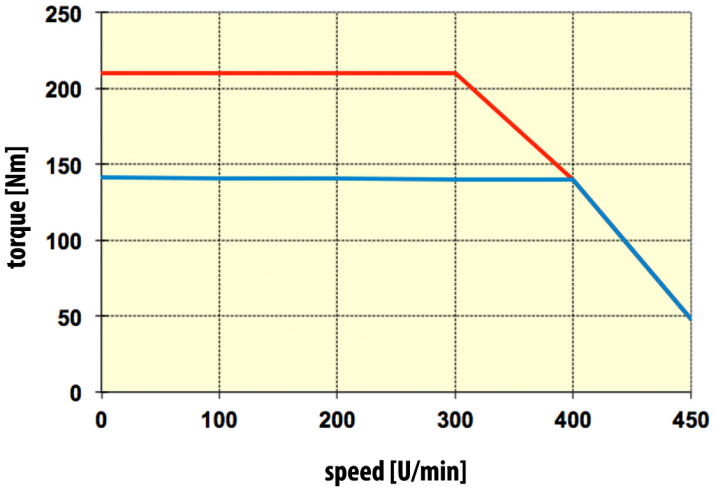

Mpeak cold motor | **Mpeak at Delta T=80k** | **Duty type: S3-40%, 1 min** | **Duty type: S3-60%, 1 min** | **Duty type: S1**

SQM132-200 Performance Data

Reference Data	Symbol	SQM132-200				Unit	Tol.
Frame Size		132					
Nominal Torque (80 K) (1)(3)(6)	M_N	357	314	250	200	Nm	
Nominal Speed	n_N	100	200	300	400	rpm	
Nominal Power (80 K) (1)(3)(6)	P_N	3,74	6,58	7,85	8,38	kW	
Nominal Current (80 K) (1)(3)(6)	I_N	10,2	16,1	17,5	17,1	A	
Design Voltage	U_{ac}	3 x 400				VAC	
	U_{bus}	560				VDC	
Nominal Frequency	f_N	55	110	165	220	Hz	
Pole Number	p	66					
Nominal Efficiency	η	85	90	91	92	%	
Moment of Inertia	J_{mot}	0,230455				kgm^2	
Duty		S1				-	
Protection class		IP54				-	
Isolation metarial class		H loaded to B				-	
Thermal Protection		PTO(Klixon) 120°C				-	
Cooling		IC 410 - Natural				-	
Colour		RAL 9005				-	
Weight		175,00				kg	
Feedback		Please see the option list				-	
Connection Type		STAR				-	
Limit Data							
Peak Torque at cold motor (4)	M_{pkc}	767,6	675,1	537,5	430,0	Nm	
Cont. stall torque (80 K) (1)(3)(6)	M_0	357,7	314,6	250,8	200,6	Nm	
Stall current (80 K) (1)(3)(6)	I_0	10,2	16,1	17,5	17,1	A	
Peak Torque (80 K) (1)(3)(6)	M_{max}	535,5	471,0	375,0	300,0	Nm	
Maximum Current (80 K) (1)(3)(6)	I_{max}	15,30	24,15	26,25	25,65	A	
Speed at Peak Torque	n_{pkT}	75	154	246	340	rpm	
Max. Speed	n_{max}	167	300	408	500	rpm	
Torque at max. speed	M_{nmax}	35,7	31,4	25,0	20,0	Nm	
Thermal Time Constant	t_{th}	90	90	90	90	minutes	
Working Ambient Temp.		0 to 40				°C	
Storage Temp.		-30 to +85				°C	
Electrical Data							
Torque Constant (2)	k_T	35,00	19,50	14,29	11,70	Nm/A	+/-10%
E.M.F (ph-ph) (2)	U_E	2570	1430	1046	763	V/1000 rpm	+/-10%
Motor Constant (2)	k_M	22,81	23,48	22,88	26,49	Nm/√W	Nom
Winding Resistance (ph-ph) (2)	R_{ph}	1,57	0,46	0,26	0,13	Ω	+/-10%
Winding Inductance (ph-ph) (2)	L	83,7	25,8	13,9	7,35	mH	+/-10%

Notes:

(1) ΔT = 80 K; difference between winding-temperature and ambient-temperature = 80°C
(2) Electrical data are measured at 25 °C
(3) All data referenced to sinusoidal commutation
(4) Peak torque duration at cold motor is 5 sec.
(5) Continuous stall torque is given for 5 rpm
(6) Winding temperature measured by using PT100 from one point.
Surface Measurement please check Temperature point drawing

Additional Note: For other performance data, please see torque/speed curves
Other torque - speed - voltage values are available.

SQM132-200 Performance Curves

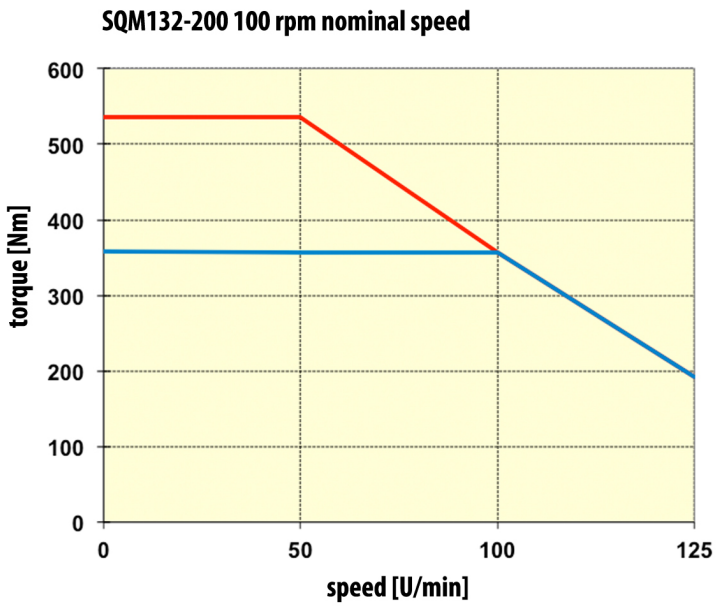

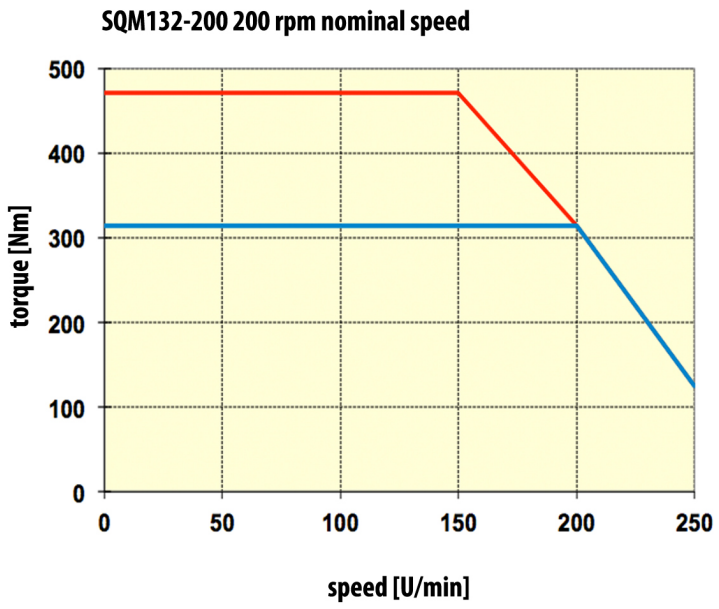

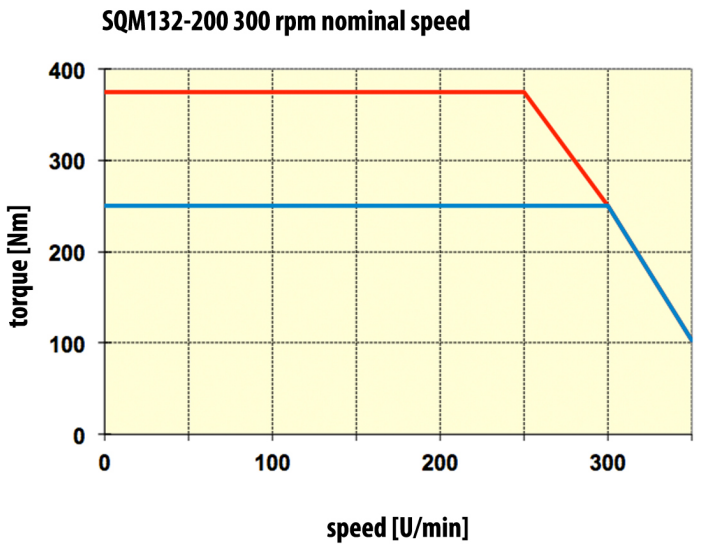

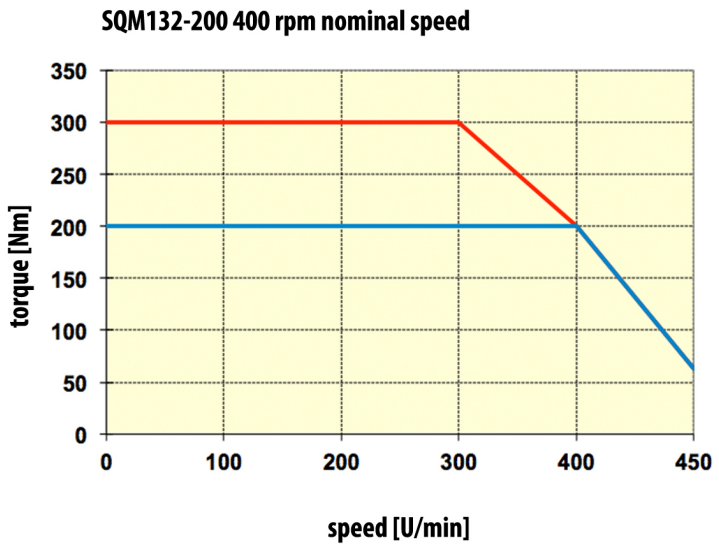

Mpeak cold motor | Mpeak at Delta T=80k | Duty type: S3-40%, 1 min | Duty type: S3-60%, 1 min | Duty type: S1

SQM132-240 Performance Data

Reference Data	Symbol	SQM132-240				Unit	Tol.
Frame Size		132					
Nominal Torque (80 K) (1)(3)(6)	M_N	428	377	300	240	Nm	
Nominal Speed	n_N	100	200	300	400	rpm	
Nominal Power (80 K) (1)(3)(6)	P_N	4,48	7,90	9,42	10,05	kW	
Nominal Current (80 K) (1)(3)(6)	I_N	12,5	20,1	21,4	20,5	A	
Design Voltage	U_{ac}	3 x 400				VAC	
	U_{bus}	560				VDC	
Nominal Frequency	f_N	55	110	165	220	Hz	
Pole Number	p	66					
Nominal Efficiency	η	86	91	92	92	%	
Moment of Inertia	J_{mot}	0,272891				kgm^2	
Duty		S1				-	
Protection class		IP54				-	
Isolation metarial class		H loaded to B				-	
Thermal Protection		PTO(Klixon) 120°C				-	
Cooling		IC 410 - Natural				-	
Colour		RAL 9005				-	
Weight		195,00				kg	
Feedback		Please see the option list				-	
Connection Type		STAR			DELTA	-	
Limit Data							
Peak Torque at cold motor (4)	M_{pkc}	920,2	810,6	645,0	516,0	Nm	
Cont. stall torque (80 K) (1)(3)(6)	M_0	428,4	377,4	300,6	240,5	Nm	
Stall current (80 K) (1)(3)(6)	I_0	12,5	20,1	21,4	20,5	A	
Peak Torque (80 K) (1)(3)(6)	M_{max}	642,0	565,5	450,0	360,0	Nm	
Maximum Current (80 K) (1)(3)(6)	I_{max}	18,75	30,15	32,10	30,75	A	
Speed at Peak Torque	n_{pkT}	77	158	250	335	rpm	
Max. Speed	n_{max}	170	310	412	497	rpm	
Torque at max. speed	M_{nmax}	42,8	37,7	30,0	24,0	Nm	
Thermal Time Constant	t_{th}	90	90	90	90	minutes	
Working Ambient Temp.		0 to 40				°C	
Storage Temp.		-30 to +85				°C	
Electrical Data							
Torque Constant (2)	k_T	34,24	18,76	14,02	11,71	Nm/A	+/-10%
E.M.F (ph-ph) (2)	U_E	2630	1370	1030	792	V/1000 rpm	+/-10%
Motor Constant (2)	k_M	24,52	26,66	26,26	28,82	Nm/√W	Nom
Winding Resistance (ph-ph) (2)	R_{ph}	1,3	0,33	0,19	0,11	Ω	+/-10%
Winding Inductance (ph-ph) (2)	L	72,9	19,8	11,16	6,6	mH	+/-10%

Notes:

(1) ΔT = 80 K; difference between winding-temperature and ambient-temperature = 80°C
(2) Electrical datas are measured at 25 °C
(3) All data referenced to sinusoidal commutation
(4) Peak torque duration at cold motor is 5 sec.
(5) Continuous stall torque is given for 5 rpm
(6) Winding temperature measured by using PT100 from one point.
Surface Measurement please check Temperature point drawing

Additional Note: For other performance data, please see torque/speed curves
Other torque - speed - voltage values are available.

SQM132-240 Performance Curves

SQM132-240 100 rpm nominal speed

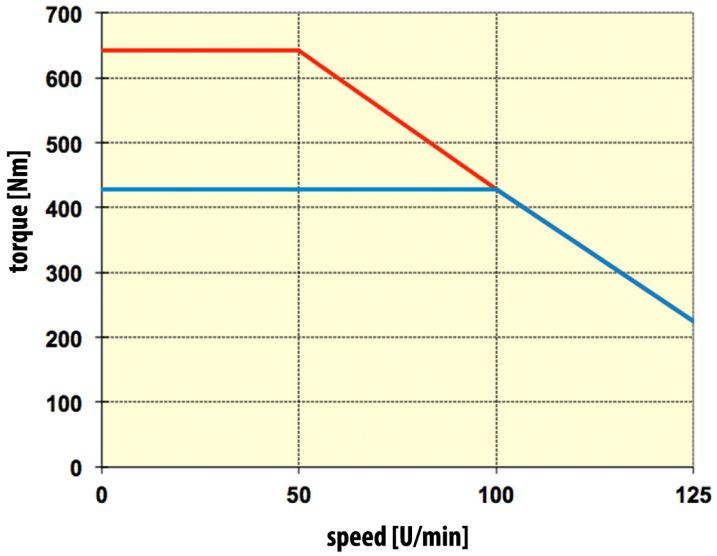

SQM132-240 200 rpm nominal speed

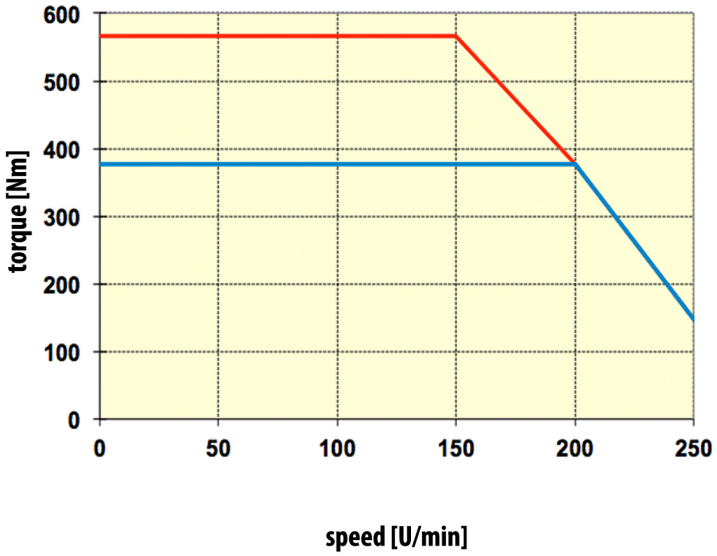

SQM132-240 300 rpm nominal speed

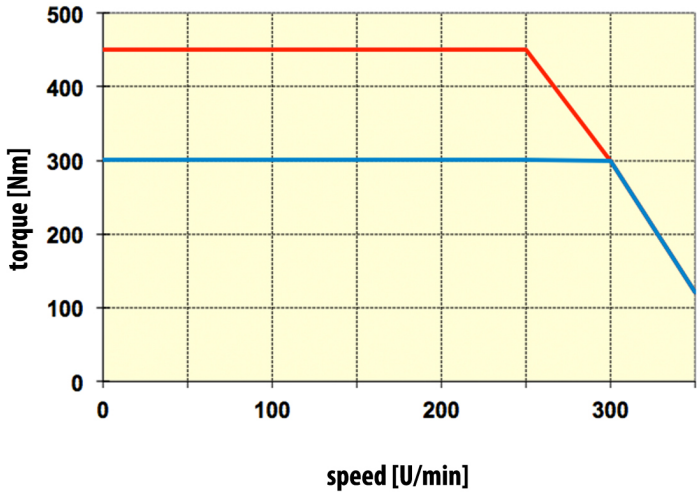

SQM132-240 400 rpm nominal speed

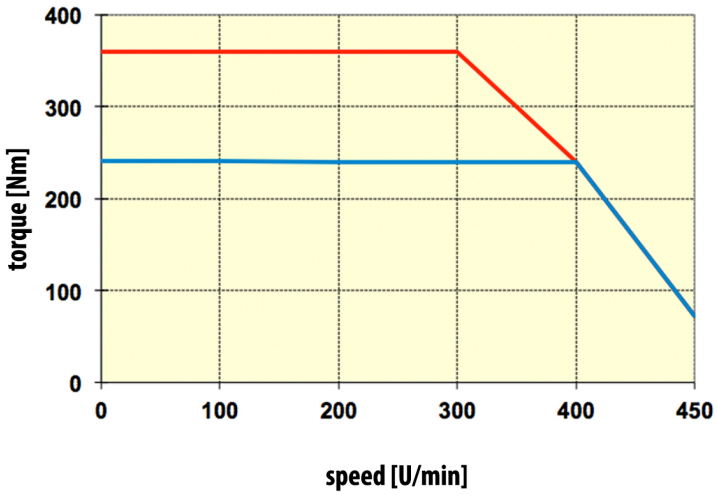

Mpeak cold motor | Mpeak at Delta T=80k | Duty type: S3-40%, 1 min | Duty type: S3-60%, 1 min | Duty type: S1

SQM160-200 Performance Data

Reference Data	Symbol	SQM160-200				Unit	Tol.
Frame Size		160					
Nominal Torque (80 K) (1)(3)(6)	M_N	510	485	460	440	Nm	
Nominal Speed	n_N	70	100	150	200	rpm	
Nominal Power (80 K) (1)(3)(6)	P_N	3,74	5,08	7,23	9,21	kW	
Nominal Current (80 K) (1)(3)(6)	I_N	10,3	13,5	18,5	22,6	A	
Design Voltage	U_{ac}	3 x 400				VAC	
	U_{bus}	560				VDC	
Nominal Frequency	f_N	39	55	83	110	Hz	
Pole Number	p	66					
Nominal Efficiency	η	90	92	93	94	%	
Moment of Inertia	J_{mot}	0,456095				kgm^2	
Duty		S1				-	
Protection class		IP54				-	
Isolation metarial class		H loaded to B				-	
Thermal Protection		PTO(Klixon) 120°C				-	
Cooling		IC 410 - Natural				-	
Colour		RAL 9005				-	
Weight		225,00				kg	
Feedback		Please see the option list				-	
Connection Type		DELTA			STAR	-	
Limit Data							
Peak Torque at cold motor (4)	M_{pkc}	1096,5	1042,8	989,0	946,0	Nm	
Cont. stall torque (80 K) (1)(3)(6)	M_0	513,1	487,9	463,2	444,0	Nm	
Stall current (80 K) (1)(3)(6)	I_0	10,3	13,5	18,5	22,6	A	
Peak Torque (80 K) (1)(3)(6)	M_{max}	765,0	727,5	690,0	660,0	Nm	
Maximum Current (80 K) (1)(3)(6)	I_{max}	15,45	20,25	27,75	33,90	A	
Speed at Peak Torque	n_{pkT}	50	74	112	150	rpm	
Max. Speed	n_{max}	130	175	255	325	rpm	
Torque at max. speed	M_{nmax}	51,0	48,5	46,0	44,0	Nm	
Thermal Time Constant	t_{th}	120	120	120	120	minutes	
Working Ambient Temp.		0 to 40				°C	
Storage Temp.		-30 to +85				°C	
Electrical Data							
Torque Constant (2)	k_T	49,51	35,93	24,86	19,47	Nm/A	+/-10%
E.M.F (ph-ph) (2)	U_E	3000	2210	1526	1185	V/1000 rpm	+/-10%
Motor Constant (2)	k_M	28,17	28,90	28,43	29,02	Nm/√W	Nom
Winding Resistance (ph-ph) (2)	R_{ph}	2,06	1,03	0,51	0,3	Ω	+/-10%
Winding Inductance (ph-ph) (2)	L	134,4	72,9	34,8	21	mH	+/-10%

Notes:

(1) ΔT = 80 K; difference between winding-temperature and ambient-temperature = 80°C
(2) Electrical datas are measured at 25 °C
(3) All data referenced to sinusoidal commutation
(4) Peak torque duration at cold motor is 5 sec.
(5) Continuous stall torque is given for 5 rpm
(6) Winding temperature measured by using PT100 from one point.
Surface Measurement please check Temperature point drawing

Additional Note: For other performance data, please see torque/speed curves
Other torque - speed - voltage values are available.

SQM160-200 Performance Curves

SQM160-200 70 rpm nominal speed

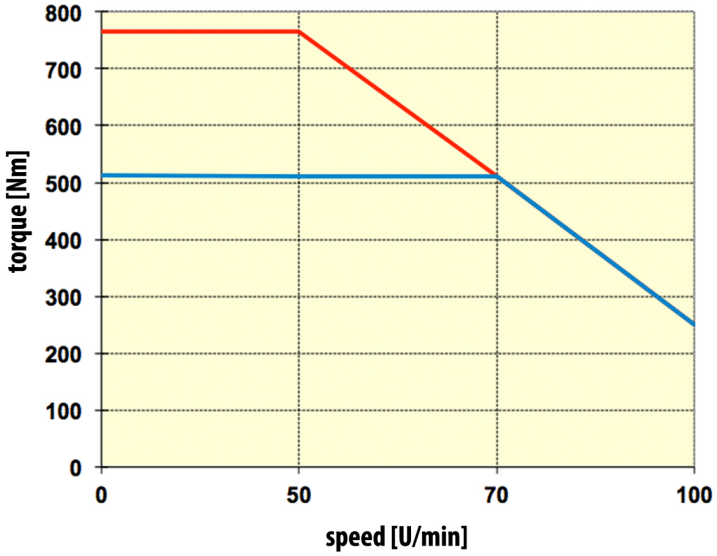

SQM160-200 100 rpm nominal speed

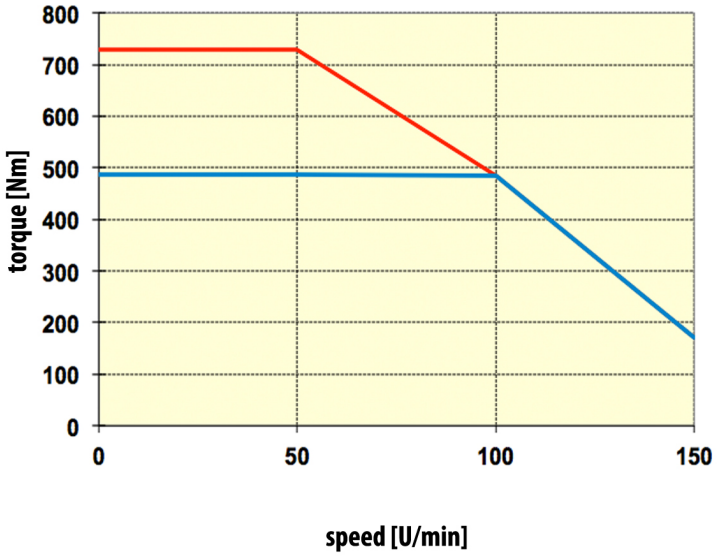

SQM160-200 150 rpm nominal speed

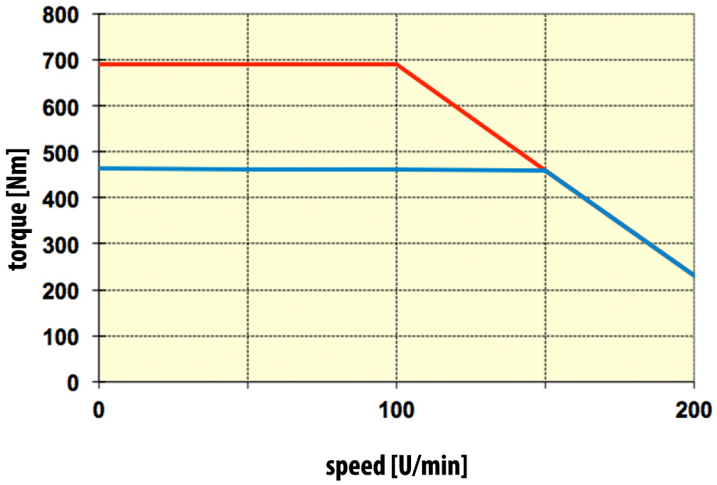

SQM160-200 200 rpm nominal speed

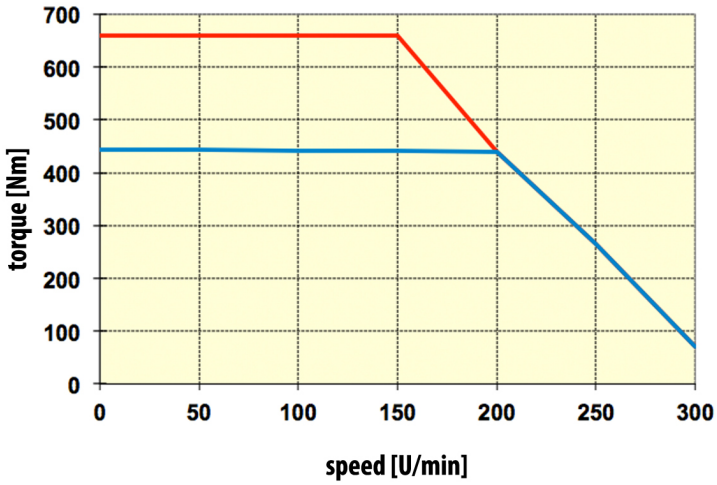

Mpeak cold motor | **Mpeak at Delta T=80k** | **Duty type: S3-40%, 1 min** | **Duty type: S3-60%, 1 min** | **Duty type: S1**

SQM160-300 Performance Data

Reference Data	Symbol	SQM160-300				Unit	Tol.
Frame Size		160					
Nominal Torque (80 K) (1)(3)(6)	M_N	765	727	635	570	Nm	
Nominal Speed	n_N	70	100	150	200	rpm	
Nominal Power (80 K) (1)(3)(6)	P_N	5,61	7,61	9,97	11,94	kW	
Nominal Current (80 K) (1)(3)(6)	I_N	15,5	20,8	24,5	28,2	A	
Design Voltage	U_{ac}	3 x 400				VAC	
	U_{bus}	560				VDC	
Nominal Frequency	f_N	39	55	83	110	Hz	
Pole Number	p	66					
Nominal Efficiency	η	91	93	95	95	%	
Moment of Inertia	J_{mot}	0,669536				kgm^2	
Duty		S1				-	
Protection class		IP54				-	
Isolation metarial class		H loaded to B				-	
Thermal Protection		PTO(Klixon) 120°C				-	
Cooling		IC 410 - Natural				-	
Colour		RAL 9005				-	
Weight		302,00				kg	
Feedback		Please see the option list				-	
Connection Type		DELTA			STAR	-	
Limit Data							
Peak Torque at cold motor (4)	M_{pkc}	1645	1563	1365	1226	Nm	
Cont. stall torque (80 K) (1)(3)(6)	M_0	768,1	729,9	637,5	573,4	Nm	
Stall current (80 K) (1)(3)(6)	I_0	15,5	20,8	24,5	28,2	A	
Peak Torque (80 K) (1)(3)(6)	M_{max}	1148	1091	953	855	Nm	
Maximum Current (80 K) (1)(3)(6)	I_{max}	23,25	31,20	36,75	42,30	A	
Speed at Peak Torque	n_{pkT}	50	75	115	160	rpm	
Max. Speed	n_{max}	133	185	250	315	rpm	
Torque at max. speed	M_{nmax}	76,5	72,7	63,5	57,0	Nm	
Thermal Time Constant	t_{th}	120	120	120	120	minutes	
Working Ambient Temp.		0 to 40				°C	
Storage Temp.		-30 to +85				°C	
Electrical Data							
Torque Constant (2)	k_T	49,35	34,95	25,92	20,21	Nm/A	+/-10%
E.M.F (ph-ph) (2)	U_E	3000	2210	1580	1230	V/1000 rpm	+/-10%
Motor Constant (2)	k_M	37,74	35,40	38,01	38,90	Nm/√W	Nom
Winding Resistance (ph-ph) (2)	R_{ph}	1,14	0,65	0,31	0,18	Ω	+/-10%
Winding Inductance (ph-ph) (2)	L	89,6	48,6	24,8	15	mH	+/-10%

Notes:

(1) ΔT = 80 K; difference between winding-temperature and ambient-temperature = 80°C
(2) Electrical datas are measured at 25 °C
(3) All data referenced to sinusoidal commutation
(4) Peak torque duration at cold motor is 5 sec.
(5) Continuous stall torque is given for 5 rpm
(6) Winding temperature measured by using PT100 from one point.
Surface Measurement please check Temperature point drawing

Additional Note: For other performance data, please see torque/speed curves
Other torque - speed - voltage values are available.

SQM160-300 Performance Curves

SQM160-300 70 rpm nominal speed

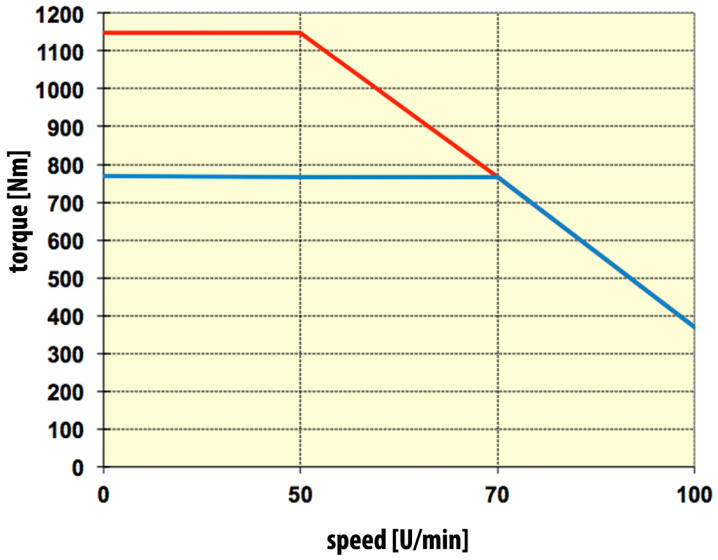

SQM160-300 100 rpm nominal speed

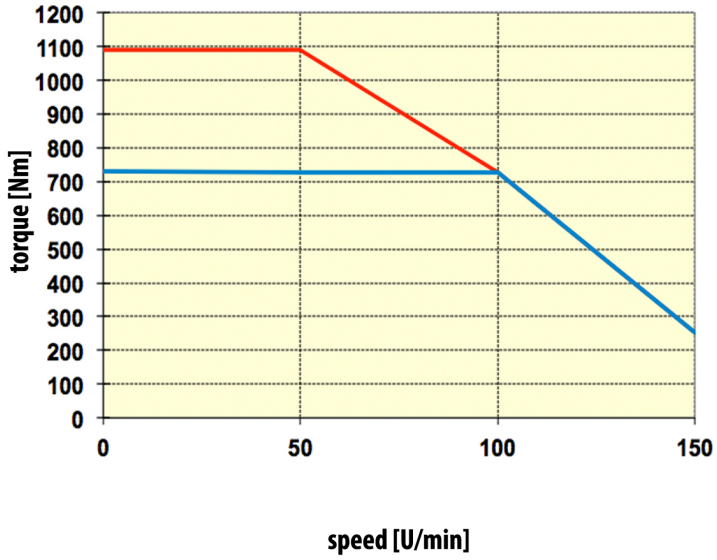

SQM160-300 150 rpm nominal speed

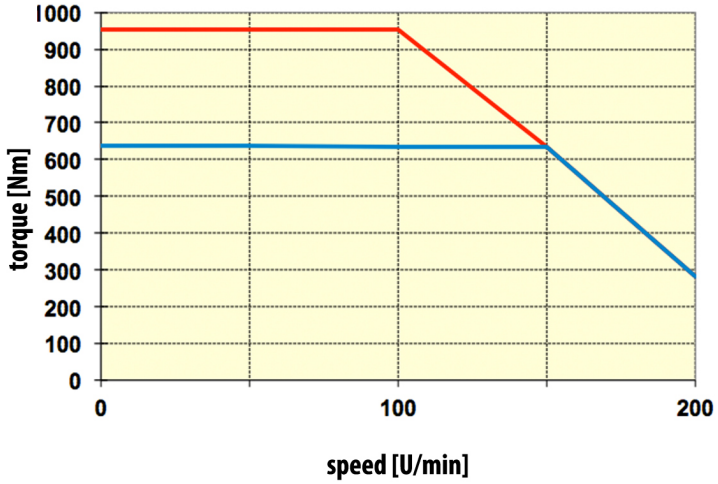

SQM160-300 200 rpm nominal speed

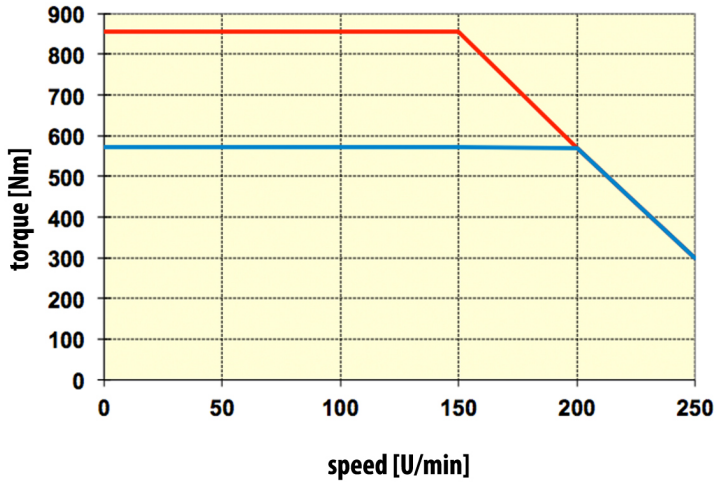

Mpeak cold motor | **Mpeak at Delta T=80k** | **Duty type: S3-40%, 1 min** | **Duty type: S3-60%, 1 min** | **Duty type: S1**

SQM160-400 Performance Data

Reference Data	Symbol	SQM160-400				Unit	Tol.
Frame Size		160					
Nominal Torque (80 K) (1)(3)(6)	M_N	1020	970	795	700	Nm	
Nominal Speed	n_N	70	100	150	200	rpm	
Nominal Power (80 K) (1)(3)(6)	P_N	7,48	10,16	12,49	14,66	kW	
Nominal Current (80 K) (1)(3)(6)	I_N	21,9	26,7	29,7	31,2	A	
Design Voltage	U_{ac}	3 x 400				VAC	
	U_{bus}	560				VDC	
Nominal Frequency	f_N	39	55	83	110	Hz	
Pole Number	p	66					
Nominal Efficiency	η	91	93	94	95	%	
Moment of Inertia	J_{mot}	0,876796				kgm^2	
Duty		S1				-	
Protection class		IP54				-	
Isolation metarial class		H loaded to B				-	
Thermal Protection		PTO(Klixon) 120°C				-	
Cooling		IC 410 - Natural				-	
Colour		RAL 9005				-	
Weight		379,00				kg	
Feedback		Please see the option list				-	
Connection Type		DELTA		STAR	DELTA	-	
Limit Data							
Peak Torque at cold motor (4)	M_{pkc}	2193	2086	1709	1505	Nm	
Cont. stall torque (80 K) (1)(3)(6)	M_0	1023,1	972,9	797,4	703,5	Nm	
Stall current (80 K) (1)(3)(6)	I_0	21,9	26,7	29,7	31,2	A	
Peak Torque (80 K) (1)(3)(6)	M_{max}	1530	1455	1193	1050	Nm	
Maximum Current (80 K) (1)(3)(6)	I_{max}	32,85	40,05	44,55	46,80	A	
Speed at Peak Torque	n_{pkT}	52	73	115	155	rpm	
Max. Speed	n_{max}	135	180	240	290	rpm	
Torque at max. speed	M_{nmax}	102,0	97,0	79,5	70,0	Nm	
Thermal Time Constant	t_{th}	120	120	120	120	minutes	
Working Ambient Temp.		0 to 40				°C	
Storage Temp.		-30 to +85				°C	
Electrical Data							
Torque Constant (2)	k_T	46,58	36,33	26,77	22,44	Nm/A	+/-10%
E.M.F (ph-ph) (2)	U_E	2942	2210	1640	1260	V/1000 rpm	+/-10%
Motor Constant (2)	k_M	42,79	46,90	46,60	50,81	Nm/√W	Nom
Winding Resistance (ph-ph) (2)	R_{ph}	0,79	0,4	0,22	0,13	Ω	+/-10%
Winding Inductance (ph-ph) (2)	L	64,8	36,5	20,1	11,9	mH	+/-10%

Notes:

(1) ΔT = 80 K; difference between winding-temperature and ambient-temperature = 80°C
(2) Electrical datas are measured at 25 °C
(3) All data referenced to sinusoidal commutation
(4) Peak torque duration at cold motor is 5 sec.
(5) Continuous stall torque is given for 5 rpm
(6) Winding temperature measured by using PT100 from one point.
Surface Measurement please check Temperature point drawing

Additional Note: For other performance data, please see torque/speed curves
Other torque - speed - voltage values are available.

SQM160-400 Performance Curves

SQM160-400 70 rpm nominal speed

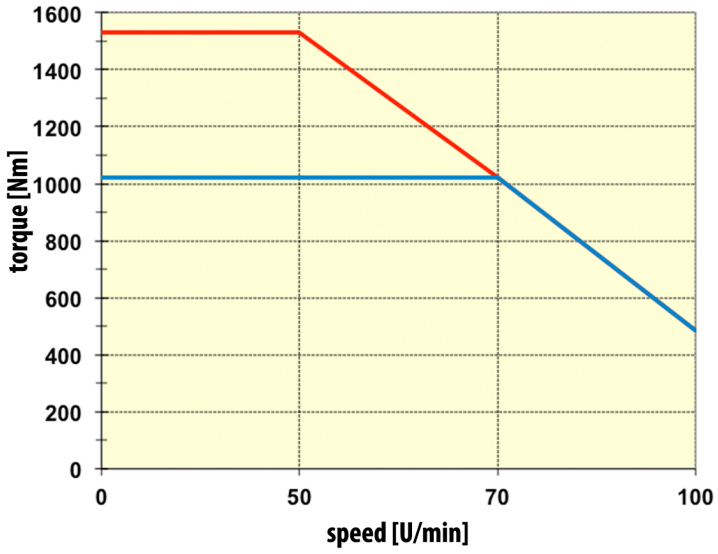

SQM160-400 100 rpm nominal speed

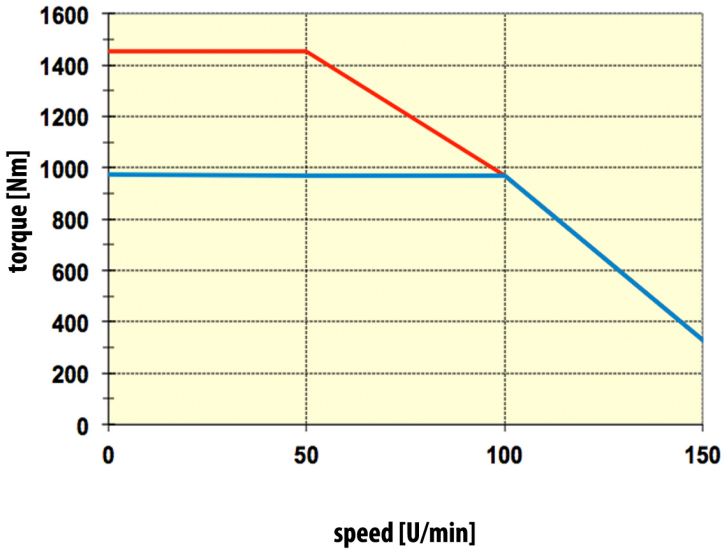

SQM160-400 150 rpm nominal speed

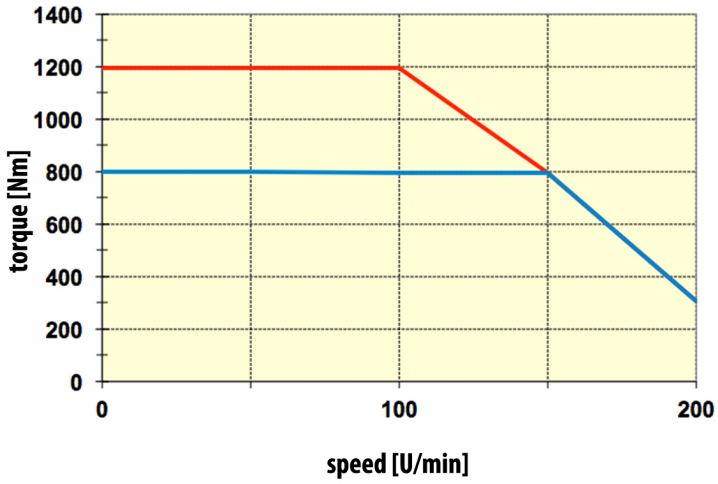

SQM160-400 200 rpm nominal speed

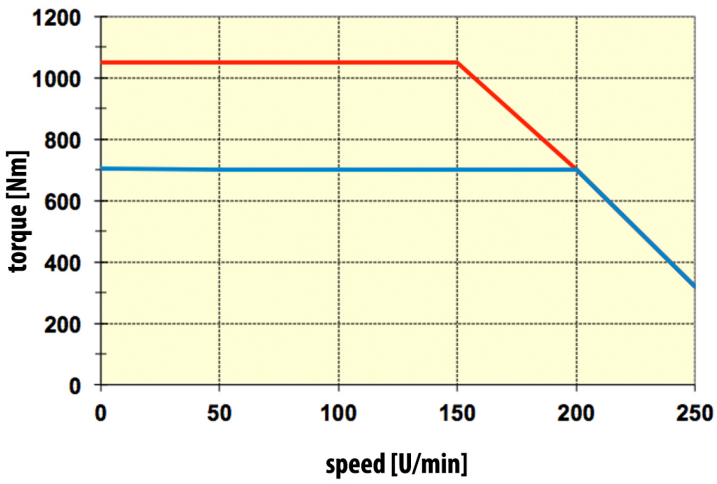

Mpeak cold motor | **Mpeak at Delta T=80k** | **Duty type: S3-40%, 1 min** | **Duty type: S3-60%, 1 min** | **Duty type: S1**

SQM160-500 Performance Data

Reference Data	Symbol	SQM160-500				Unit	Tol.
Frame Size		160					
Nominal Torque (80 K)(1)(3)(6)	M_N	1275	1212	934	803	Nm	
Nominal Speed	n_N	70	100	150	200	rpm	
Nominal Power (80 K)(1)(3)(6)	P_N	9,35	12,69	14,67	16,82	kW	
Nominal Current (80 K)(1)(3)(6)	I_N	26	33	33,1	35,8	A	
Design Voltage	U_{ac}	3 x 400				VAC	
	U_{bus}	560				VDC	
Nominal Frequency	f_N	39	55	83	110	Hz	
Pole Number	p	66					
Nominal Efficiency	η	91	94	95	96	%	
Moment of Inertia	J_{mot}	1,100037				kgm^2	
Duty		S1				-	
Protection class		IP54				-	
Isolation metarial class		H loaded to B				-	
Thermal Protection		PTO(Klixon) 120°C				-	
Cooling		IC 410 - Natural				-	
Colour		RAL 9005				-	
Weight		456,00				kg	
Feedback		Please see the option list				-	
Connection Type		DELTA			STAR	-	
Limit Data							
Peak Torque at cold motor (4)	M_{pkc}	2741,3	2605,8	2008,1	1726,5	Nm	
Cont. stall torque (80 K) (1)(3)(6)	M_0	1277,6	1214,4	936,8	806,2	Nm	
Stall current (80 K) (1)(3)(6)	I_0	26	33	33,1	35,8	A	
Peak Torque (80 K) (1)(3)(6)	M_{max}	1912,5	1818,0	1401,0	1204,5	Nm	
Maximum Current (80 K) (1)(3)(6)	I_{max}	39,00	49,50	49,65	53,70	A	
Speed at Peak Torque	n_{pkT}	50	73	116	165	rpm	
Max. Speed	n_{max}	130	180	235	290	rpm	
Torque at max. speed	M_{nmax}	127,5	121,2	93,4	80,3	Nm	
Thermal Time Constant	t_{th}	120	120	120	120	minutes	
Working Ambient Temp.		0 to 40				°C	
Storage Temp.		-30 to +85				°C	
Electrical Data							
Torque Constant (2)	k_T	49,04	36,73	28,22	22,43	Nm/A	+/-10%
E.M.F (ph-ph) (2)	U_E	3028	2230	1706	1365	V/1000 rpm	+/-10%
Motor Constant (2)	k_M	53,03	53,01	54,30	52,87	Nm/√W	Nom
Winding Resistance (ph-ph) (2)	R_{ph}	0,57	0,32	0,18	0,12	Ω	+/-10%
Winding Inductance (ph-ph) (2)	L	54,7	30	17,5	11,2	mH	+/-10%

Notes:

(1) ΔT = 80 K; difference between winding-temperature and ambient-temperature = 80°C
(2) Electrical datas are measured at 25 °C
(3) All data referenced to sinusoidal commutation
(4) Peak torque duration at cold motor is 5 sec.
(5) Continuous stall torque is given for 5 rpm
(6) Winding temperature measured by using PT100 from one point.
Surface Measurement please check Temperature point drawing

Additional Note: For other performance data, please see torque/speed curves
Other torque - speed - voltage values are available.

SQM160-500 Performance Curves

SQM160-500 70 rpm nominal speed

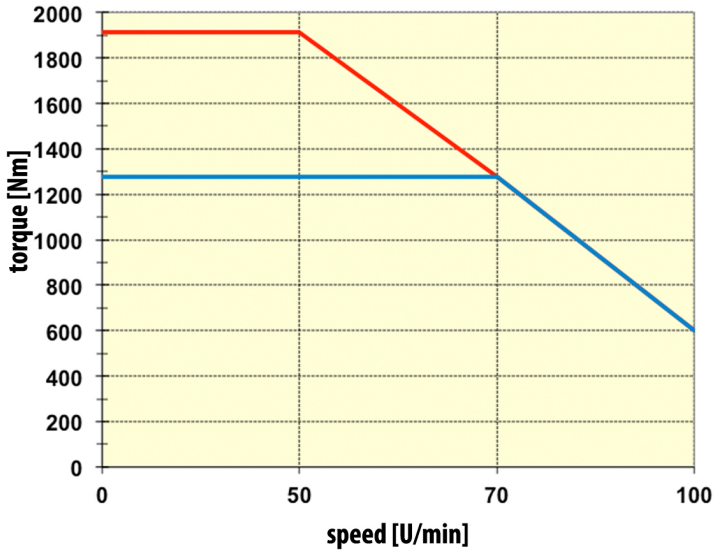

SQM160-500 100 rpm nominal speed

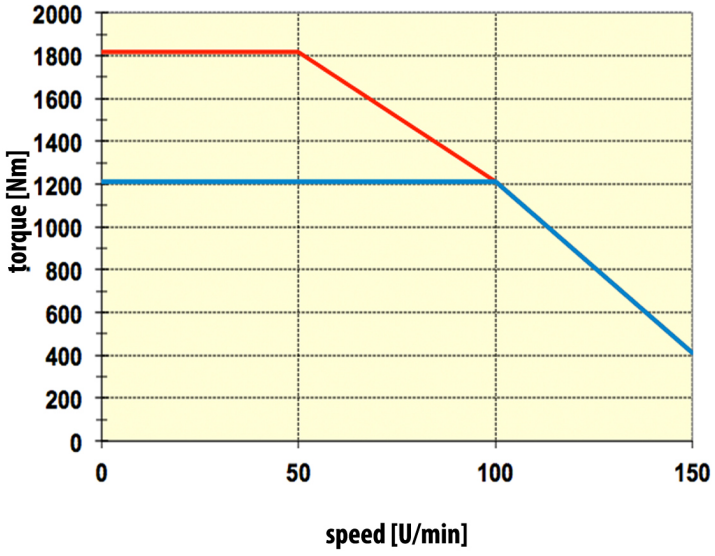

SQM160-500 150 rpm nominal speed

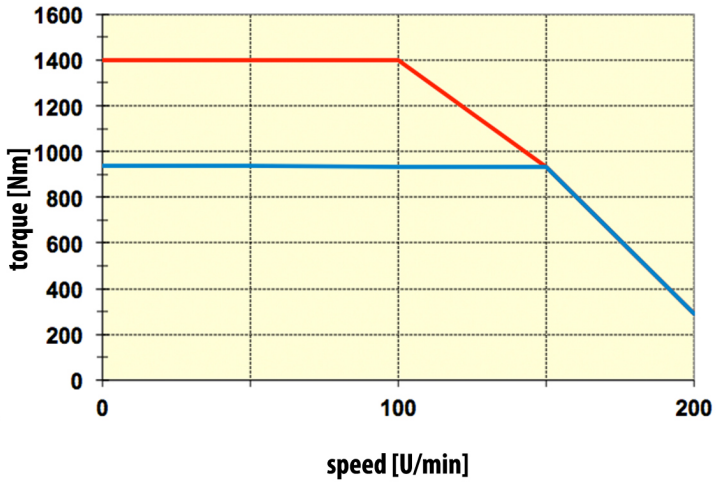

SQM160-500 200 rpm nominal speed

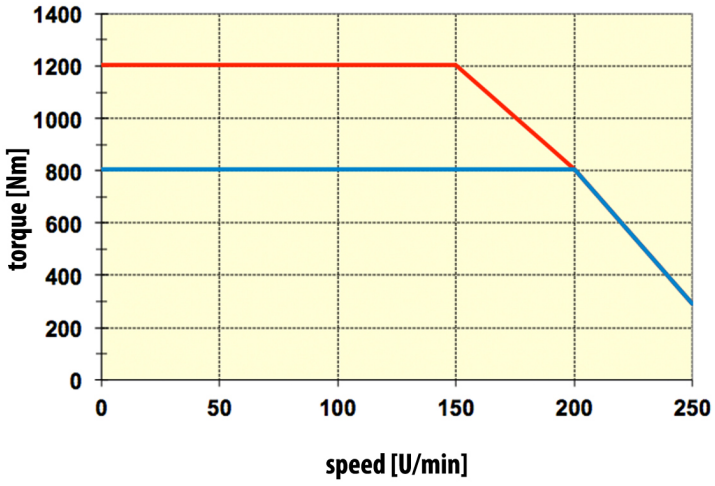

Mpeak cold motor | Mpeak at Delta T=80k | Duty type: S3-40%, 1 min | Duty type: S3-60%, 1 min | Duty type: S1

SQM200-300 Performance Data

Reference Data	Symbol	SQM200-300				Unit	Tol.
Frame Size		200					
Nominal Torque (80 K)(1)(3)(6)	M_N	1370	1150	1020	860	Nm	
Nominal Speed	n_N	70	100	150	200	rpm	
Nominal Power (80 K)(1)(3)(6)	P_N	10,04	12,04	16,02	18,01	kW	
Nominal Current (80 K)(1)(3)(6)	I_N	30	32,5	40,6	40,3	A	
Design Voltage	U_{ac}	3 x 400				VAC	
	U_{bus}	560				VDC	
Nominal Frequency	f_N	51	73	110	147	Hz	
Pole Number	p	88					
Nominal Efficiency	η	92	93	95	96	%	
Moment of Inertia	J_{mot}	1,474654				kgm^2	
Duty		S1				-	
Protection class		IP54				-	
Isolation metarial class		H loaded to B				-	
Thermal Protection		PTO(Klixon) 120°C				-	
Cooling		IC 410 - Natural				-	
Colour		RAL 9005				-	
Weight		512,00				kg	
Feedback		Please see the option list				-	
Connection Type		DELTA		STAR	DELTA	-	
Limit Data							
Peak Torque at cold motor (4)	M_{pkc}	2945,5	2472,5	2193,0	1849,0	Nm	
Cont. stall torque (80 K) (1)(3)(6)	M_0	1393,3	1156,0	1027,0	867,0	Nm	
Stall current (80 K) (1)(3)(6)	I_0	30	32,5	40,6	40,3	A	
Peak Torque (80 K) (1)(3)(6)	M_{max}	2055,0	1725,0	1530,0	1290,0	Nm	
Maximum Current (80 K) (1)(3)(6)	I_{max}	45,00	48,75	60,90	60,45	A	
Speed at Peak Torque	n_{pkT}	51	75	115	157	rpm	
Max. Speed	n_{max}	140	180	240	290	rpm	
Torque at max. speed	M_{nmax}	137,0	115,0	102,0	86,0	Nm	
Thermal Time Constant	t_{th}	150	150	150	150	minutes	
Working Ambient Temp.		0 to 40				°C	
Storage Temp.		-30 to +85				°C	
Electrical Data							
Torque Constant (2)	k_T	45,67	35,38	25,12	21,34	Nm/A	+/-10%
E.M.F (ph-ph) (2)	U_E	2814	2170	1547	1280	V/1000 rpm	+/-10%
Motor Constant (2)	k_M	60,49	64,60	64,87	65,86	Nm/√W	Nom
Winding Resistance (ph-ph) (2)	R_{ph}	0,38	0,2	0,1	0,07	Ω	+/-10%
Winding Inductance (ph-ph) (2)	L	37,3	22,3	11,3	7,7	mH	+/-10%

Notes:

(1) ΔT = 80 K; difference between winding-temperature and ambient-temperature = 80°C
(2) Electrical datas are measured at 25 °C
(3) All data referenced to sinusoidal commutation
(4) Peak torque duration at cold motor is 5 sec.
(5) Continuous stall torque is given for 5 rpm
(6) Winding temperature measured by using PT100 from one point.
Surface Measurement please check Temperature point drawing

Additional Note: For other performance data, please see torque/speed curves
Other torque - speed - voltage values are available.

SQM200-300 Performance Curves

SQM200-300 70 rpm nominal speed

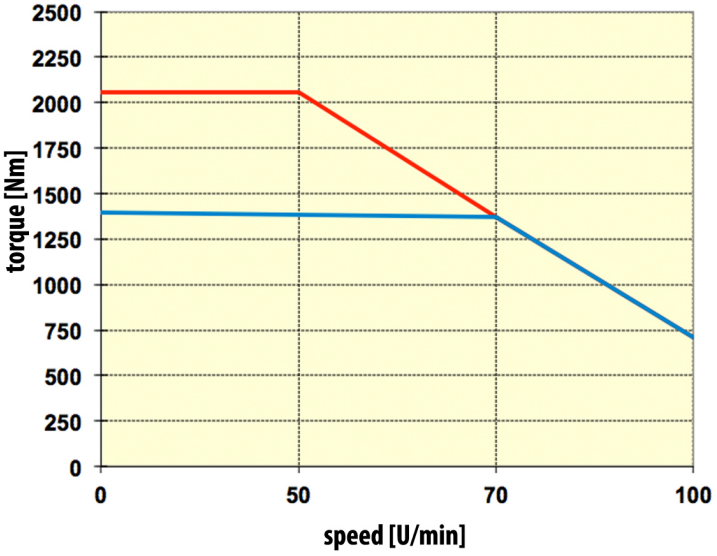

SQM200-300 100 rpm nominal speed

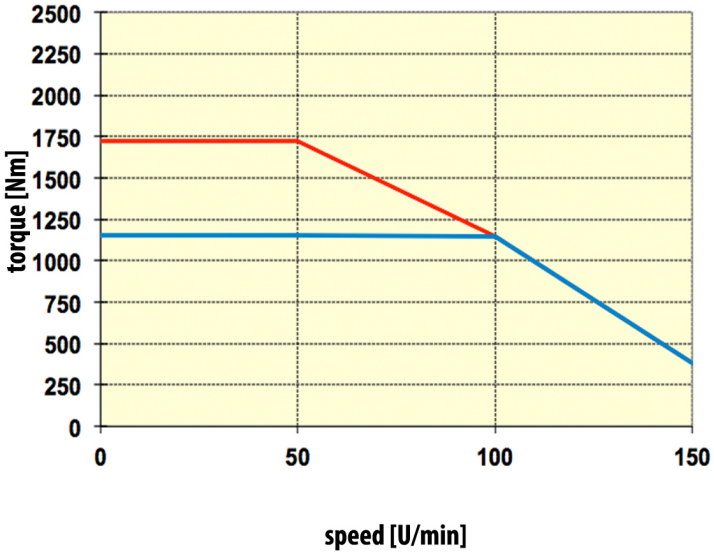

SQM200-300 150 rpm nominal speed

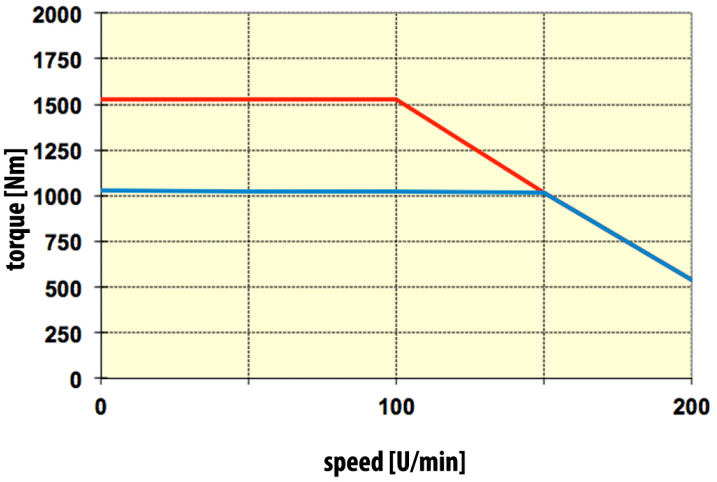

SQM200-300 200 rpm nominal speed

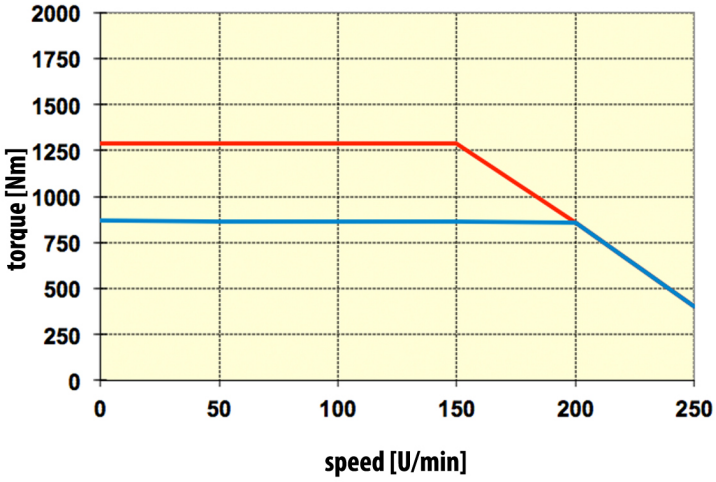

Mpeak cold motor | Mpeak at Delta T=80k | Duty type: S3-40%, 1 min | Duty type: S3-60%, 1 min | Duty type: S1

SQM200-400 Performance Data

Reference Data	Symbol	SQM200-400				Unit	Tol.
Frame Size		200					
Nominal Torque (80 K) (1)(3)(6)	M_N	1827	1533	1310	1050	Nm	
Nominal Speed	n_N	70	100	150	200	rpm	
Nominal Power (80 K) (1)(3)(6)	P_N	13,39	16,05	20,58	21,99	kW	
Nominal Current (80 K) (1)(3)(6)	I_N	41	42,7	53	48	A	
Design Voltage	U_{ac}	3 x 400				VAC	
	U_{bus}	560				VDC	
Nominal Frequency	f_N	51	73	110	147	Hz	
Pole Number	p	88					
Nominal Efficiency	η	92	94	95	96	%	
Moment of Inertia	J_{mot}	2,046779				kgm^2	
Duty		S1				-	
Protection class		IP54				-	
Isolation metarial class		H loaded to B				-	
Thermal Protection		PTO(Klixon) 120°C				-	
Cooling		IC 410 - Natural				-	
Colour		RAL 9005				-	
Weight		622,00				kg	
Feedback		Please see the option list				-	
Connection Type		DELTA				-	
Limit Data							
Peak Torque at cold motor (4)	M_{pkc}	3928,1	3296,0	2816,5	2257,5	Nm	
Cont. stall torque (80 K) (1)(3)(6)	M_0	1832,0	1539,0	1317,0	1056,0	Nm	
Stall current (80 K) (1)(3)(6)	I_0	41	42,7	53	48	A	
Peak Torque (80 K) (1)(3)(6)	M_{max}	2740,5	2299,5	1965,0	1575,0	Nm	
Maximum Current (80 K) (1)(3)(6)	I_{max}	61,50	64,05	79,50	72,00	A	
Speed at Peak Torque	n_{pkT}	52	75	120	160	rpm	
Max. Speed	n_{max}	140	175	245	280	rpm	
Torque at max. speed	M_{nmax}	182,7	153,3	131,0	105,0	Nm	
Thermal Time Constant	t_{th}	150	150	150	150	minutes	
Working Ambient Temp.		0 to 40				°C	
Storage Temp.		-30 to +85				°C	
Electrical Data							
Torque Constant (2)	k_T	44,56	35,90	24,72	21,88	Nm/A	+/-10%
E.M.F (ph-ph) (2)	U_E	2728	2220	1533	1365	V/1000 rpm	+/-10%
Motor Constant (2)	k_M	77,57	74,22	77,39	75,48	Nm/√W	Nom
Winding Resistance (ph-ph) (2)	R_{ph}	0,22	0,156	0,068	0,056	Ω	+/-10%
Winding Inductance (ph-ph) (2)	L	26,3	17,4	8,3	6,6	mH	+/-10%

Notes:

(1) ΔT = 80 K; difference between winding-temperature and ambient-temperature = 80°C
(2) Electrical datas are measured at 25 °C
(3) All data referenced to sinusoidal commutation
(4) Peak torque duration at cold motor is 5 sec.
(5) Continuous stall torque is given for 5 rpm
(6) Winding temperature measured by using PT100 from one point.
Surface Measurement please check Temperature point drawing

Additional Note: For other performance data, please see torque/speed curves
Other torque - speed - voltage values are available.

SQM200-400 Performance Curves

SQM200-400 70 rpm nominal speed

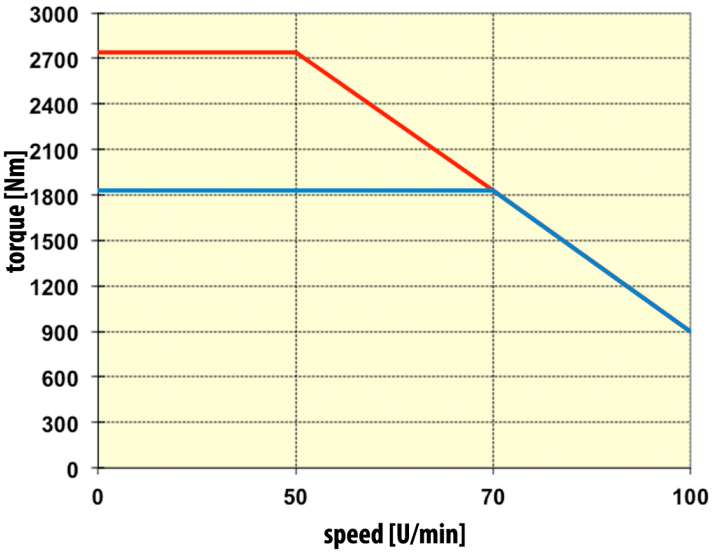

SQM200-400 100 rpm nominal speed

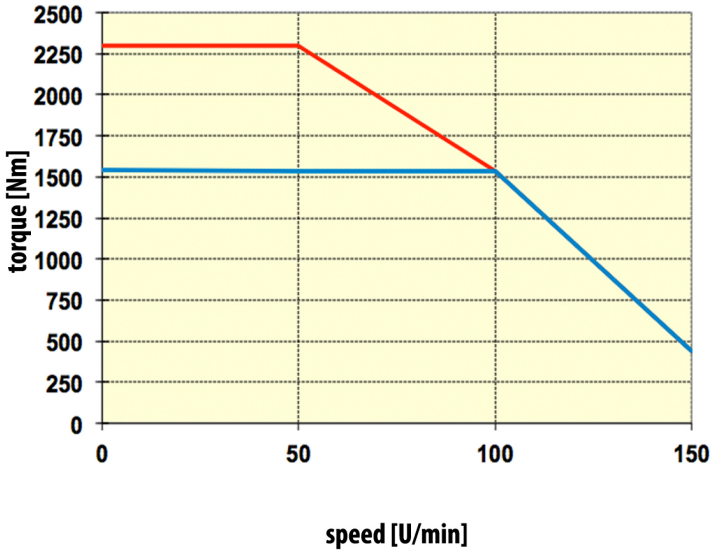

SQM200-400 150 rpm nominal speed

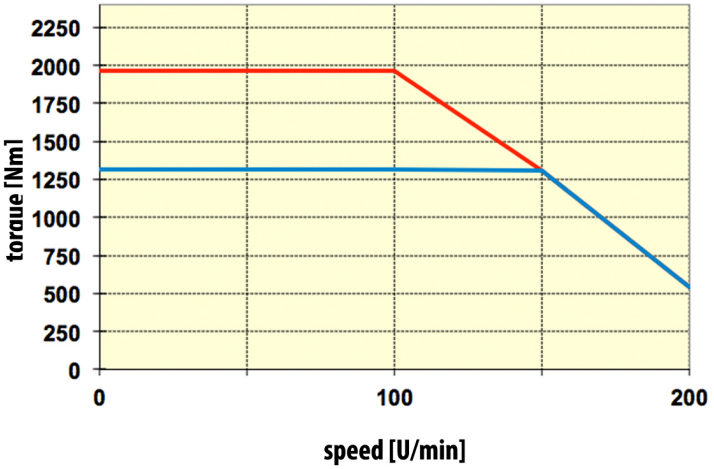

SQM200-400 200 rpm nominal speed

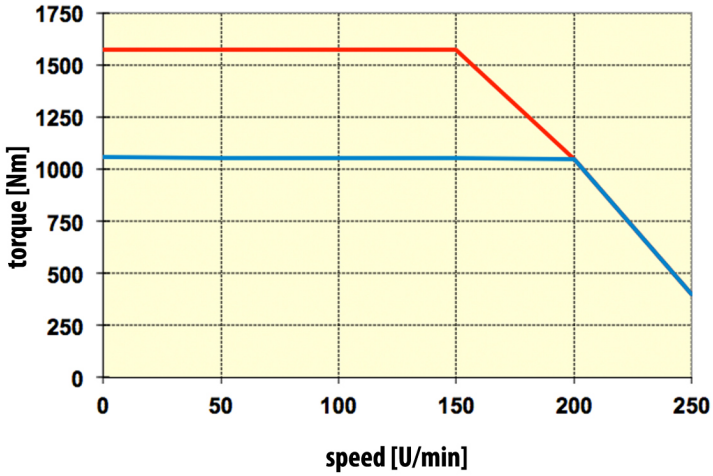

Mpeak cold motor | **Mpeak at Delta T=80k** | **Duty type: S3-40%, 1 min** | **Duty type: S3-60%, 1 min** | **Duty type: S1**

SQM200-500 Performance Data

Reference Data	Symbol	SQM200-500				Unit	Tol.
Frame Size		200					
Nominal Torque (80 K) (1)(3)(6)	M_N	2180	1830	1740	1350	Nm	
Nominal Speed	n_N	70	100	150	200	rpm	
Nominal Power (80 K) (1)(3)(6)	P_N	15,98	19,16	27,33	28,27	kW	
Nominal Current (80 K) (1)(3)(6)	I_N	48	51	73	65,1	A	
Design Voltage	U_{ac}	3 x 400				VAC	
	U_{bus}	560				VDC	
Nominal Frequency	f_N	51	73	110	147	Hz	
Pole Number	p	88					
Nominal Efficiency	η	93	95	95	96	%	
Moment of Inertia	J_{mot}	2,389074				kgm^2	
Duty		S1				-	
Protection class		IP54				-	
Isolation metarial class		H loaded to B				-	
Thermal Protection		PTO(Klixon) 120°C				-	
Cooling		IC 410 - Natural				-	
Colour		RAL 9005				-	
Weight		731,00				kg	
Feedback		Please see the option list				-	
Connection Type		DELTA	STAR		DELTA	-	
Limit Data							
Peak Torque at cold motor (4)	M_{pkc}	4687,0	3934,5	3741,0	2902,5	Nm	
Cont. stall torque (80 K) (1)(3)(6)	M_0	2187,0	1835,0	1747,0	1357,0	Nm	
Stall current (80 K) (1)(3)(6)	I_0	48	51	73	65,1	A	
Peak Torque (80 K) (1)(3)(6)	M_{max}	3270,0	2745,0	2610,0	2025,0	Nm	
Maximum Current (80 K) (1)(3)(6)	I_{max}	72,00	76,50	109,50	97,65	A	
Speed at Peak Torque	n_{pkT}	52	75	115	165	rpm	
Max. Speed	n_{max}	135	175	250	295	rpm	
Torque at max. speed	M_{nmax}	218,0	183,0	174,0	135,0	Nm	
Thermal Time Constant	t_{th}	150	150	150	150	minutes	
Working Ambient Temp.		0 to 40				°C	
Storage Temp.		-30 to +85				°C	
Electrical Data							
Torque Constant (2)	k_T	45,42	35,88	23,84	20,74	Nm/A	+/-10%
E.M.F (ph-ph) (2)	U_E	2771	2210	1473	1280	V/1000 rpm	+/-10%
Motor Constant (2)	k_M	87,40	88,34	89,77	89,24	Nm/√W	Nom
Winding Resistance (ph-ph) (2)	R_{ph}	0,18	0,11	0,047	0,036	Ω	+/-10%
Winding Inductance (ph-ph) (2)	L	21,7	13,9	6,2	4,6	mH	+/-10%

Notes:

(1) ΔT = 80 K; difference between winding-temperature and ambient-temperature = 80°C
(2) Electrical datas are measured at 25 °C
(3) All data referenced to sinusoidal commutation
(4) Peak torque duration at cold motor is 5 sec.
(5) Continuous stall torque is given for 5 rpm
(6) Winding temperature measured by using PT100 from one point.
Surface Measurement please check Temperature point drawing

Additional Note: For other performance data, please see torque/speed curves
Other torque - speed - voltage values are available.

SQM200-500 Performance Curves

SQM200-500 70 rpm nominal speed

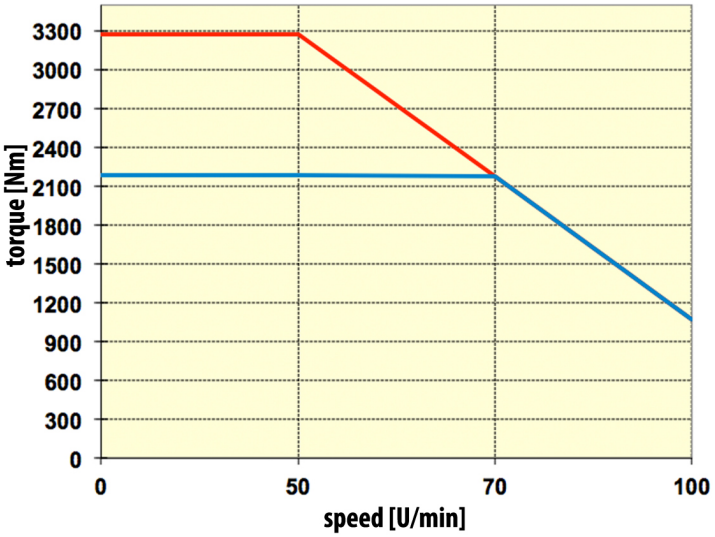

SQM200-500 100 rpm nominal speed

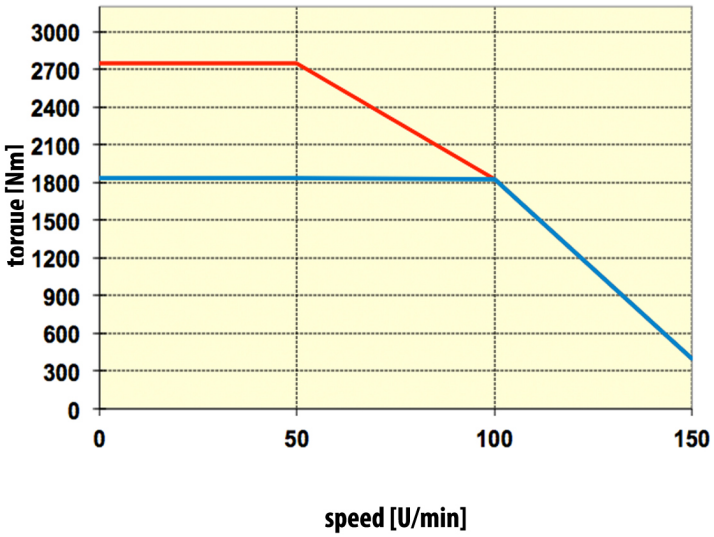

SQM200-500 150 rpm nominal speed

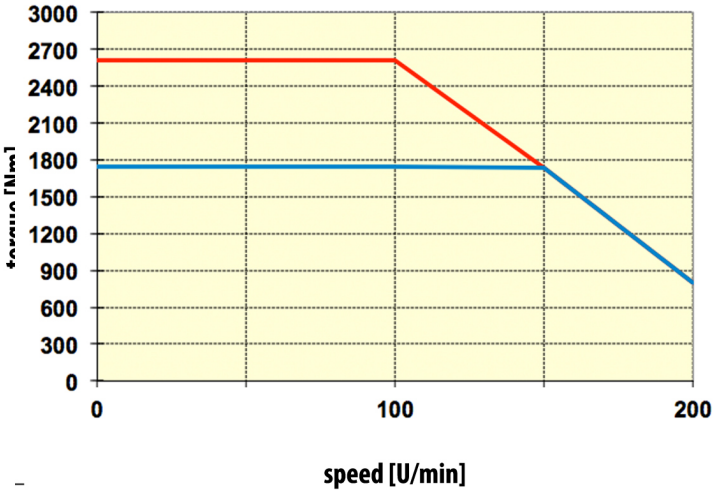

SQM200-500 200 rpm nominal speed

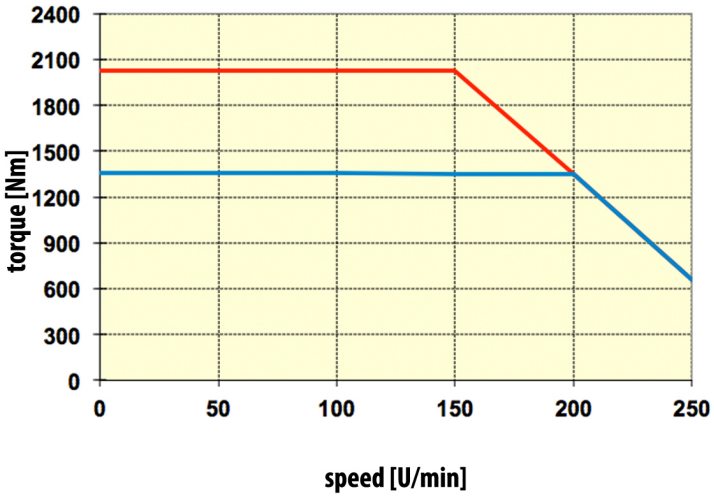

Mpeak cold motor | Mpeak at Delta T=80k | Duty type: S3-40%, 1 min | Duty type: S3-60%, 1 min | Duty type: S1

SQM200-600 Performance Data

Reference Data	Symbol	SQM200-600				Unit	Tol.
Frame Size		200					
Nominal Torque (80 K) (1)(3)(6)	M_N	2617	2200	2050	1630	Nm	
Nominal Speed	n_N	70	100	150	200	rpm	
Nominal Power (80 K) (1)(3)(6)	P_N	19,18	23,04	32,20	34,14	kW	
Nominal Current (80 K) (1)(3)(6)	I_N	57,4	59	83	77	A	
Design Voltage	U_{ac}	3 x 400				VAC	
	U_{bus}	560				VDC	
Nominal Frequency	f_N	51	73	110	147	Hz	
Pole Number	p	88					
Nominal Efficiency	η	93	94	95	96	%	
Moment of Inertia	J_{mot}	2,846651				kgm^2	
Duty		S1				-	
Protection class		IP54				-	
Isolation metarial class		H loaded to B				-	
Thermal Protection		PTO(Klixon) 120°C				-	
Cooling		IC 410 - Natural				-	
Colour		RAL 9005				-	
Weight		840,00				kg	
Feedback		Please see the option list				-	
Connection Type		DELTA				-	
Limit Data							
Peak Torque at cold motor (4)	M_{pkc}	5626,6	4730,0	4407,5	3504,5	Nm	
Cont. stall torque (80 K) (1)(3)(6)	M_0	2622,0	2204,0	2056,0	1637,0	Nm	
Stall current (80 K) (1)(3)(6)	I_0	57,4	59	83	77	A	
Peak Torque (80 K) (1)(3)(6)	M_{max}	3925,5	3300,0	3075,0	2445,0	Nm	
Maximum Current (80 K) (1)(3)(6)	I_{max}	86,10	88,50	124,50	115,50	A	
Speed at Peak Torque	n_{pkT}	52	75	115	170	rpm	
Max. Speed	n_{max}	135	170	245	295	rpm	
Torque at max. speed	M_{nmax}	261,7	220,0	205,0	163,0	Nm	
Thermal Time Constant	t_{th}	150	150	150	150	minutes	
Working Ambient Temp.		0 to 40				°C	
Storage Temp.		-30 to +85				°C	
Electrical Data							
Torque Constant (2)	k_T	45,59	37,29	24,70	21,17	Nm/A	+/-10%
E.M.F (ph-ph) (2)	U_E	2814	2300	1533	1280	V/1000 rpm	+/-10%
Motor Constant (2)	k_M	100,94	100,93	98,40	103,29	Nm/√W	Nom
Winding Resistance (ph-ph) (2)	R_{ph}	0,136	0,091	0,042	0,028	Ω	+/-10%
Winding Inductance (ph-ph) (2)	L	19	12,5	5,5	3,85	mH	+/-10%

Notes:

(1) ΔT = 80 K; difference between winding-temperature and ambient-temperature = 80°C
(2) Electrical data are measured at 25 °C
(3) All data referenced to sinusoidal commutation
(4) Peak torque duration at cold motor is 5 sec.
(5) Continuous stall torque is given for 5 rpm
(6) Winding temperature measured by using PT100 from one point.
Surface Measurement please check Temperature point drawing

Additional Note: For other performance data, please see torque/speed curves
Other torque - speed - voltage values are available.

SQM200-600 Performance Curves

SQM200-600 70 rpm nominal speed

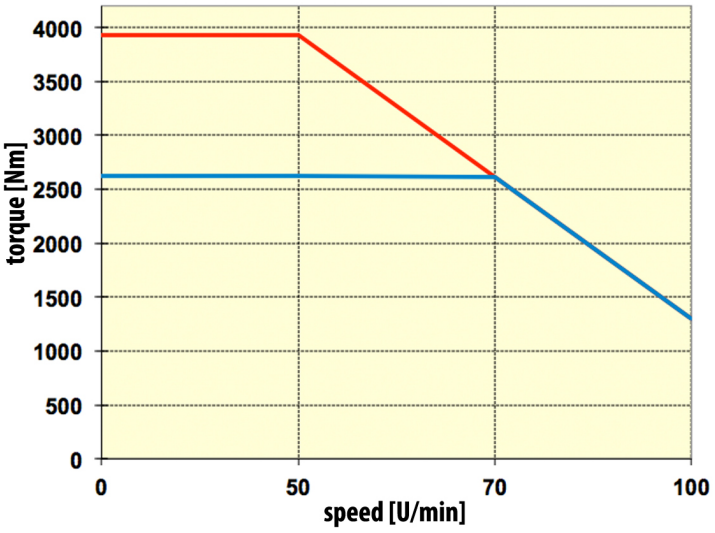

SQM200-600 100 rpm nominal speed

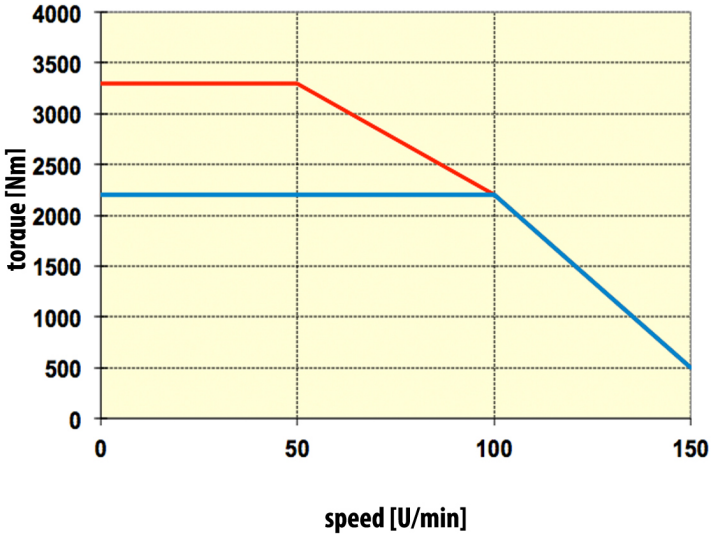

SQM200-600 150 rpm nominal speed

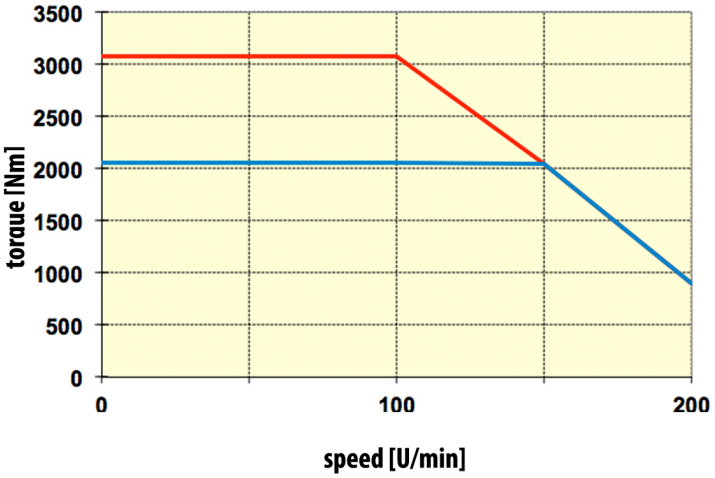

SQM200-600 200 rpm nominal speed

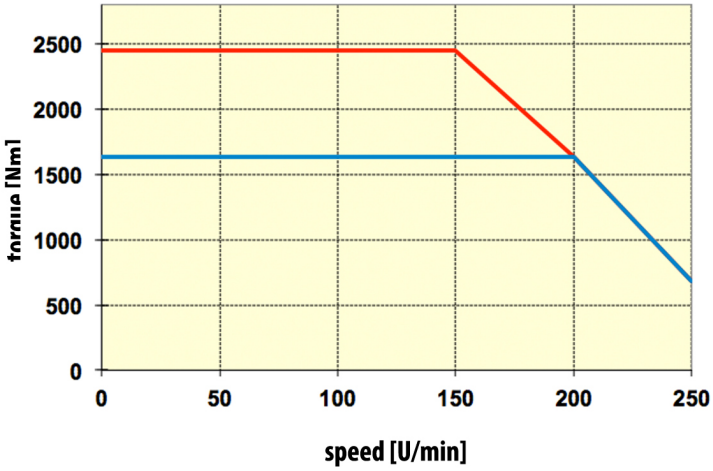

Mpeak cold motor | Mpeak at Delta T=80k | Duty type: S3-40%, 1 min | Duty type: S3-60%, 1 min | Duty type: S1

SQM200-700 Performance Data

Reference Data	Symbol	SQM200-700				Unit	Tol.
Frame Size		200					
Nominal Torque (80 K)(1)(3)(6)	M_N	3053	2560	2330	1900	Nm	
Nominal Speed	n_N	70	100	150	200	rpm	
Nominal Power (80 K)(1)(3)(6)	P_N	22,38	26,81	36,60	39,79	kW	
Nominal Current (80 K)(1)(3)(6)	I_N	70	76	95,2	98,5	A	
Design Voltage	U_{ac}	3 x 400				VAC	
	U_{bus}	560				VDC	
Nominal Frequency	f_N	51	73	110	147	Hz	
Pole Number	p	88					
Nominal Efficiency	η	93	95	96	97	%	
Moment of Inertia	J_{mot}	3,398674				kgm^2	
Duty		S1				-	
Protection class		IP54				-	
Isolation metarial class		H loaded to B				-	
Thermal Protection		PTO(Klixon) 120°C				-	
Cooling		IC 410 - Natural				-	
Colour		RAL 9005				-	
Weight		950,00				kg	
Feedback		Please see the option list				-	
Connection Type		DELTA				-	
Limit Data							
Peak Torque at cold motor (4)	M_{pkc}	6564,0	5504,0	5009,5	4085,0	Nm	
Cont. stall torque (80 K) (1)(3)(6)	M_0	3059,1	2565,1	2337,0	1905,7	Nm	
Stall current (80 K) (1)(3)(6)	I_0	70	76	95,2	98,5	A	
Peak Torque (80 K) (1)(3)(6)	M_{max}	4579,5	3840,0	3495,0	2850,0	Nm	
Maximum Current (80 K) (1)(3)(6)	I_{max}	105,00	114,00	142,80	147,75	A	
Speed at Peak Torque	n_{pkT}	54	80	120	175	rpm	
Max. Speed	n_{max}	140	180	250	295	rpm	
Torque at max. speed	M_{nmax}	305,3	256,0	233,0	190,0	Nm	
Thermal Time Constant	t_{th}	150	150	150	150	minutes	
Working Ambient Temp.		0 to 40				°C	
Storage Temp.		-30 to +85				°C	
Electrical Data							
Torque Constant (2)	k_T	43,61	33,68	24,47	19,29	Nm/A	+/-10%
E.M.F (ph-ph) (2)	U_E	2685	2090	1493	1195	V/1000 rpm	+/-10%
Motor Constant (2)	k_M	110,96	109,57	113,50	111,37	Nm/√W	Nom
Winding Resistance (ph-ph) (2)	R_{ph}	0,103	0,063	0,031	0,02	Ω	+/-10%
Winding Inductance (ph-ph) (2)	L	14,6	8,8	4,5	2,88	mH	+/-10%

Notes:

(1) ΔT = 80 K; difference between winding-temperature and ambient-temperature = 80°C
(2) Electrical datas are measured at 25 °C
(3) All data referenced to sinusoidal commutation
(4) Peak torque duration at cold motor is 5 sec.
(5) Continuous stall torque is given for 5 rpm
(6) Winding temperature measured by using PT100 from one point.
Surface Measurement please check Temperature point drawing

Additional Note: For other performance data, please see torque/speed curves
Other torque - speed - voltage values are available.

SQM200-700 Performance Curves

SQM200-700 70 rpm nominal speed

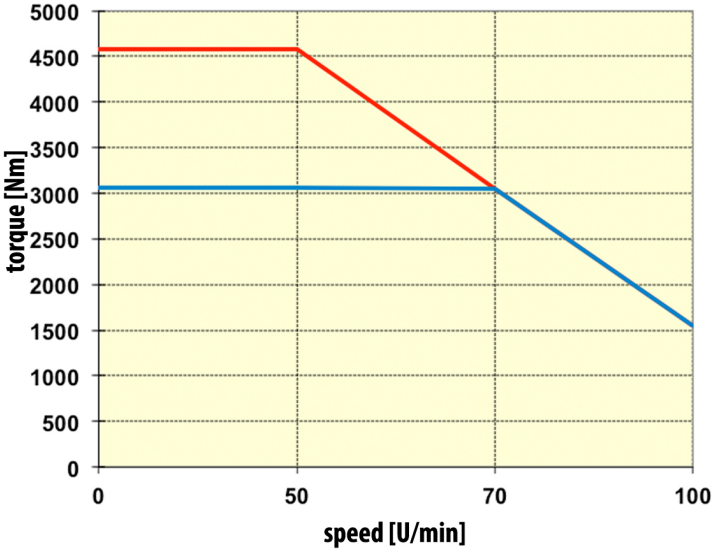

SQM200-700 100 rpm nominal speed

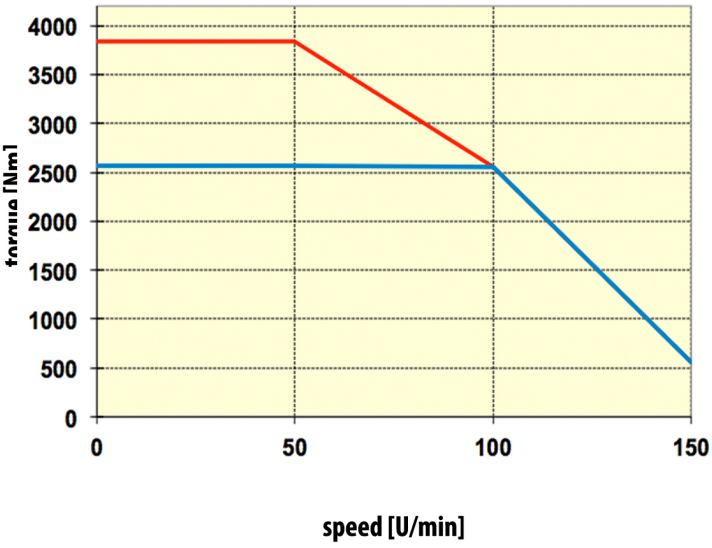

SQM200-700 150 rpm nominal speed

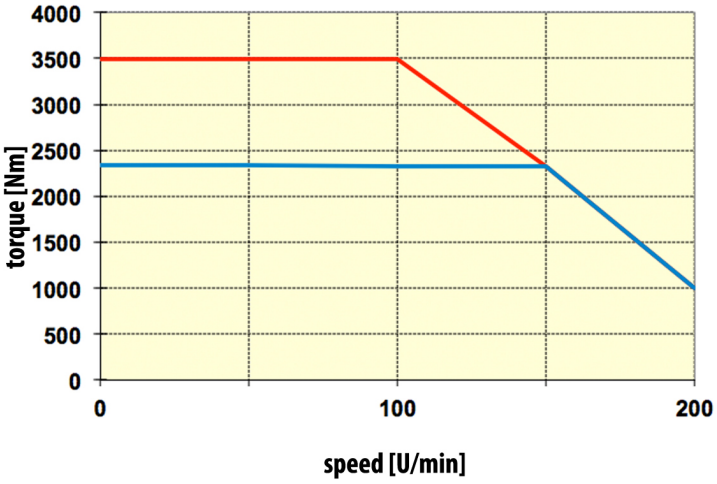

SQM200-700 200 rpm nominal speed

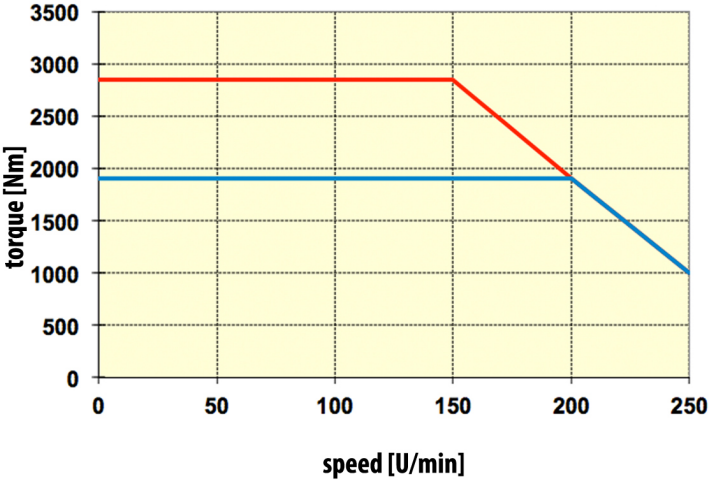

Mpeak cold motor | Mpeak at Delta T=80k | Duty type: S3-40%, 1 min | Duty type: S3-60%, 1 min | Duty type: S1

SQM200-800 Performance Data

Reference Data	Symbol	SQM200-800				Unit	Tol.
Frame Size		200					
Nominal Torque (80 K) (1)(3)(6)	M_N	3490	2950	2530	2150	Nm	
Nominal Speed	n_N	70	100	150	200	rpm	
Nominal Power (80 K) (1)(3)(6)	P_N	25,58	30,89	39,74	45,03	kW	
Nominal Current (80 K) (1)(3)(6)	I_N	79	89	91	96,3	A	
Design Voltage	U_{ac}	3 x 400				VAC	
	U_{bus}	560				VDC	
Nominal Frequency	f_N	51	73	110	147	Hz	
Pole Number	p	88					
Nominal Efficiency	η	93	96	97	97	%	
Moment of Inertia	J_{mot}	3,851964				kgm^2	
Duty		S1				-	
Protection class		IP54				-	
Isolation metarial class		H loaded to B				-	
Thermal Protection		PTO(Klixon) 120°C				-	
Cooling		IC 410 - Natural				-	
Colour		RAL 9005				-	
Weight		1060,00				kg	
Feedback		Please see the option list				-	
Connection Type		DELTA				-	
Limit Data							
Peak Torque at cold motor (4)	M_{pkc}	7503,5	6342,5	5439,5	4622,5	Nm	
Cont. stall torque (80 K) (1)(3)(6)	M_0	3500,5	2955,9	2537,6	2156,5	Nm	
Stall current (80 K) (1)(3)(6)	I_0	79	89	91	96,3	A	
Peak Torque (80 K) (1)(3)(6)	M_{max}	5235,0	4425,0	3795,0	3225,0	Nm	
Maximum Current (80 K) (1)(3)(6)	I_{max}	118,50	133,50	136,50	144,45	A	
Speed at Peak Torque	n_{pkT}	53	80	112	160	rpm	
Max. Speed	n_{max}	140	180	225	285	rpm	
Torque at max. speed	M_{nmax}	349,0	295,0	253,0	215,0	Nm	
Thermal Time Constant	t_{th}	150	150	150	150	minutes	
Working Ambient Temp.		0 to 40				°C	
Storage Temp.		-30 to +85				°C	
Electrical Data							
Torque Constant (2)	k_T	44,18	33,15	27,80	22,33	Nm/A	+/-10%
E.M.F (ph-ph) (2)	U_E	2728	2050	1706	1365	V/1000 rpm	+/-10%
Motor Constant (2)	k_M	118,28	118,68	121,34	122,90	Nm/√W	Nom
Winding Resistance (ph-ph) (2)	R_{ph}	0,093	0,052	0,035	0,022	Ω	+/-10%
Winding Inductance (ph-ph) (2)	L	13,2	7,4	5,14	3,3	mH	+/-10%

Notes:

(1) ΔT = 80 K; difference between winding-temperature and ambient-temperature = 80°C
(2) Electrical datas are measured at 25 °C
(3) All data referenced to sinusoidal commutation
(4) Peak torque duration at cold motor is 5 sec.
(5) Continuous stall torque is given for 5 rpm
(6) Winding temperature measured by using PT100 from one point.
Surface Measurement please check Temperature point drawing

Additional Note: For other performance data, please see torque/speed curves
Other torque - speed - voltage values are available.

SQM200-800 Performance Curves

SQM200-800 70 rpm nominal speed

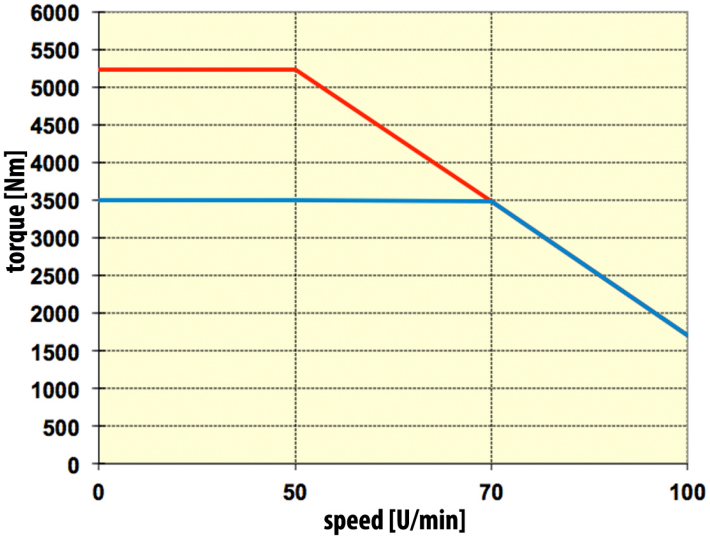

SQM200-800 100 rpm nominal speed

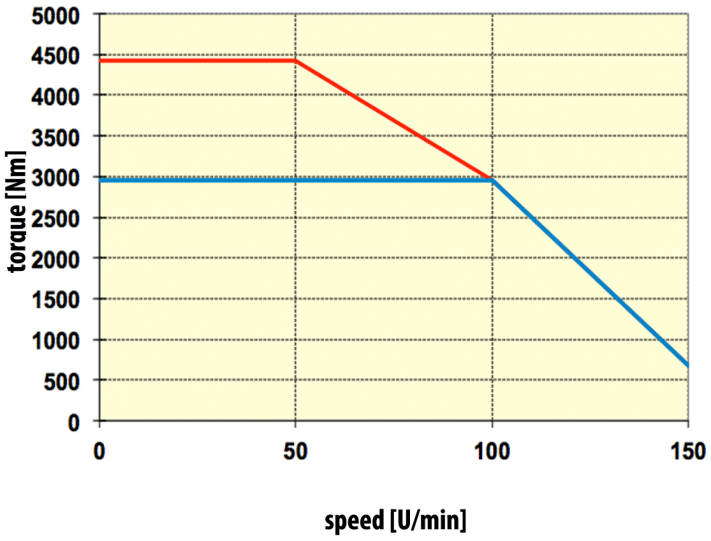

SQM200-800 150 rpm nominal speed

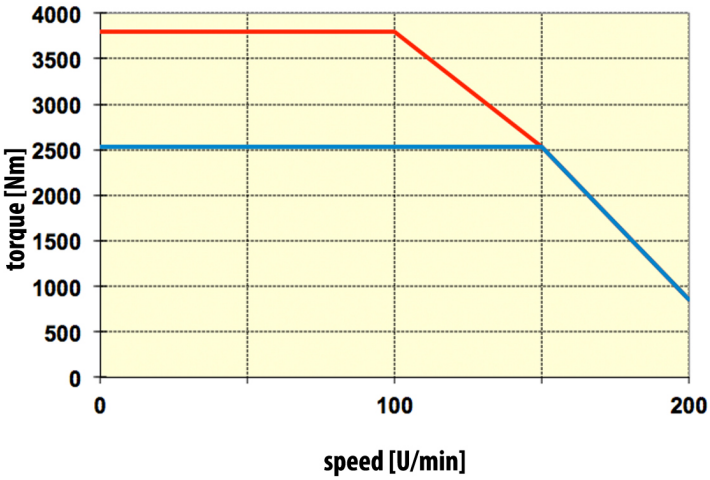

SQM200-800 200 rpm nominal speed

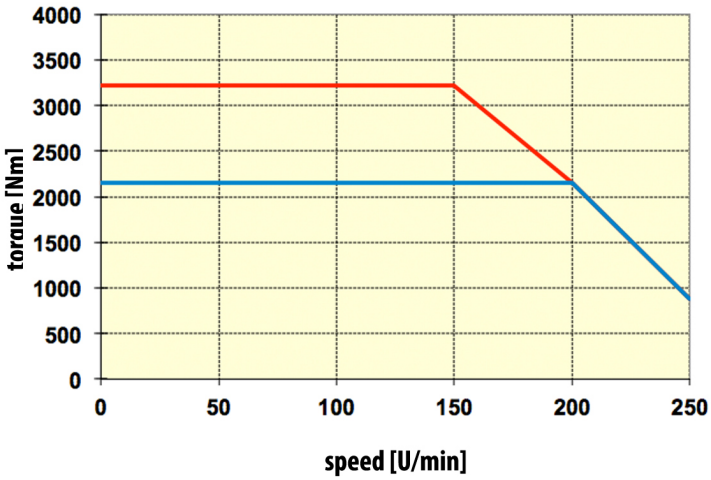

Mpeak cold motor | Mpeak at Delta T=80k | Duty type: S3-40%, 1 min | Duty type: S3-60%, 1 min | Duty type: S1

SQM315-500 Performance Data

Reference Data	Symbol	SQM315-500				Unit	Tol.
Frame Size		315					
Nominal Torque (80 K) (1)(3)(6)	M_N	4700	4250	3700	2850	Nm	
Nominal Speed	n_N	70	100	150	200	rpm	
Nominal Power (80 K) (1)(3)(6)	P_N	34,45	44,50	58,12	59,69	kW	
Nominal Current (80 K) (1)(3)(6)	I_N	86	105	119	122	A	
Design Voltage	U_{ac}	3 x 400				VAC	
	U_{bus}	560				VDC	
Nominal Frequency	f_N	64	92	138	183	Hz	
Pole Number	p	110					
Nominal Efficiency	η	95	95	96	96	%	
Moment of Inertia	J_{mot}	24,62503				kgm^2	
Duty		S1				-	
Protection class		IP54				-	
Isolation metarial class		H loaded to B				-	
Thermal Protection		PTO(Klixon) 120°C				-	
Cooling		IC 410 - Natural				-	
Colour		RAL 9005				-	
Weight		1965,00				kg	
Feedback		Please see the option list				-	
Connection Type		DELTA	STAR	DELTA	DELTA	-	
Limit Data							
Peak Torque at cold motor (4)	M_{pkc}	10105	9138	7955	6128	Nm	
Cont. stall torque (80 K) (1)(3)(6)	M_0	4704,7	4254,3	3703,7	2855,7	Nm	
Stall current (80 K) (1)(3)(6)	I_0	86	105	119	122	A	
Peak Torque (80 K) (1)(3)(6)	M_{max}	7050	6375	5550	4275	Nm	
Maximum Current (80 K) (1)(3)(6)	I_{max}	129,00	157,50	178,50	183,00	A	
Speed at Peak Torque	n_{pkT}	55	82	120	185	rpm	
Max. Speed	n_{max}	110	150	195	255	rpm	
Torque at max. speed	M_{nmax}	470,0	425,0	370,0	285,0	Nm	
Thermal Time Constant	t_{th}	190	190	190	190	minutes	
Working Ambient Temp.		0 to 40				°C	
Storage Temp.		-30 to +85				°C	
Electrical Data							
Torque Constant (2)	k_T	54,65	40,48	31,09	23,36	Nm/A	+/-10%
E.M.F (ph-ph) (2)	U_E	3543	2630	2026	1520	V/1000 rpm	+/-10%
Motor Constant (2)	k_M	192,02	190,81	189,22	190,74	Nm/√W	Nom
Winding Resistance (ph-ph) (2)	R_{ph}	0,054	0,03	0,018	0,01	Ω	+/-10%
Winding Inductance (ph-ph) (2)	L	7,08	3,9	2,31	1,3	mH	+/-10%

Notes:

(1) ΔT = 80 K; difference between winding-temperature and ambient-temperature = 80°C
(2) Electrical datas are measured at 25 °C
(3) All data referenced to sinusoidal commutation
(4) Peak torque duration at cold motor is 5 sec.
(5) Continuous stall torque is given for 5 rpm
(6) Winding temperature measured by using PT100 from one point.
Surface Measurement please check Temperature point drawing

Additional Note: For other performance data, please see torque/speed curves
Other torque - speed - voltage values are available.

SQM315-500 Performance Curves

SQM315-500 70 rpm nominal speed

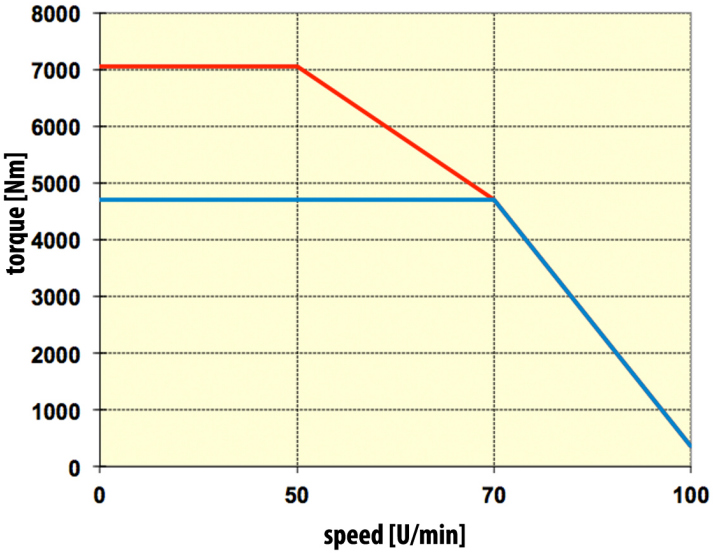

SQM315-500 100 rpm nominal speed

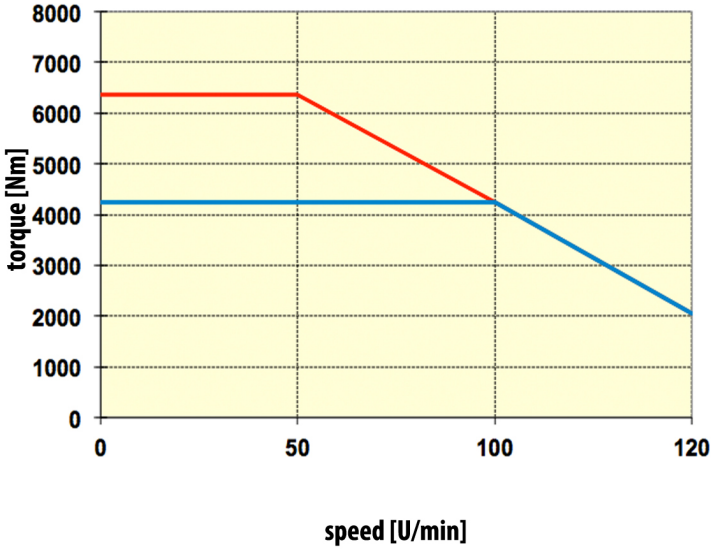

SQM315-500 150 rpm nominal speed

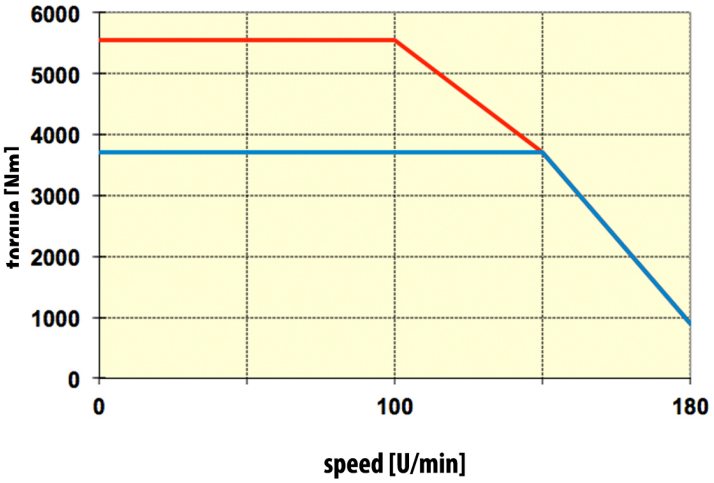

SQM315-500 200 rpm nominal speed

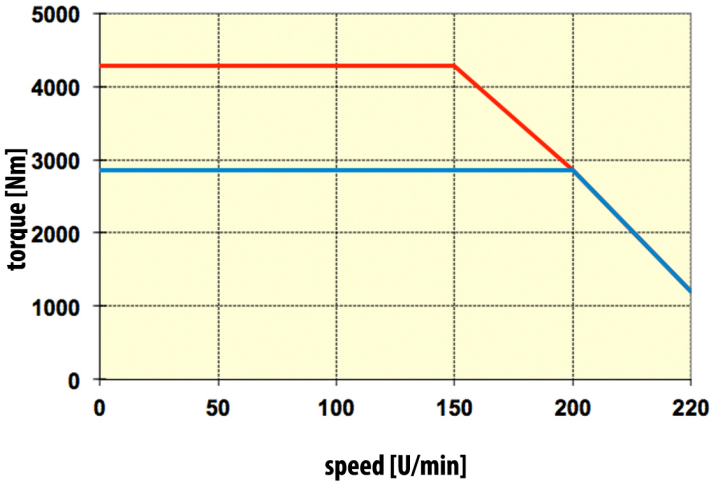

Mpeak cold motor | Mpeak at Delta T=80k | Duty type: S3-40%, 1 min | Duty type: S3-60%, 1 min | Duty type: S1

SQM315-700 Performance Data

Reference Data	Symbol	SQM315-700				Unit	Tol.
Frame Size		315					
Nominal Torque (80 K) (1)(3)(6)	M_N	6350	5800	4800	3800	Nm	
Nominal Speed	n_N	70	100	150	200	rpm	
Nominal Power (80 K) (1)(3)(6)	P_N	46,54	60,73	75,39	79,58	kW	
Nominal Current (80 K) (1)(3)(6)	I_N	126	150	165	157	A	
Design Voltage	U_{ac}	3 x 400				VAC	
	U_{bus}	560				VDC	
Nominal Frequency	f_N	64	92	138	183	Hz	
Pole Number	p	110					
Nominal Efficiency	η	95	96	97	97	%	
Moment of Inertia	J_{mot}	33,53582				kgm^2	
Duty		S1				-	
Protection class		IP54				-	
Isolation metarial class		H loaded to B				-	
Thermal Protection		PTO(Klixon) 120°C				-	
Cooling		IC 410 - Natural				-	
Colour		RAL 9005				-	
Weight		2500,00				kg	
Feedback		Please see the option list				-	
Connection Type		DELTA				-	
Limit Data							
Peak Torque at cold motor (4)	M_{pkc}	13653	12470	10320	8170	Nm	
Cont. stall torque (80 K) (1)(3)(6)	M_0	6356,4	5805,8	4804,8	3803,8	Nm	
Stall current (80 K) (1)(3)(6)	I_0	126	150	165	157	A	
Peak Torque (80 K) (1)(3)(6)	M_{max}	9525	8700	7200	5700	Nm	
Maximum Current (80 K) (1)(3)(6)	I_{max}	189	225	248	236	A	
Speed at Peak Torque	n_{pkT}	60	80	120	170	rpm	
Max. Speed	n_{max}	115	140	190	235	rpm	
Torque at max. speed	M_{nmax}	635,0	580,0	480,0	380,0	Nm	
Thermal Time Constant	t_{th}	190	190	190	190	minutes	
Working Ambient Temp.		0 to 40				°C	
Storage Temp.		-30 to +85				°C	
Electrical Data							
Torque Constant (2)	k_T	50,40	38,67	29,09	24,20	Nm/A	+/-10%
E.M.F (ph-ph) (2)	U_E	3543	2830	2126	1415	V/1000 rpm	+/-10%
Motor Constant (2)	k_M	226,52	212,85	216,83	279,48	Nm/√W	Nom
Winding Resistance (ph-ph) (2)	R_{ph}	0,033	0,022	0,012	0,005	Ω	+/-10%
Winding Inductance (ph-ph) (2)	L	5,06	3,24	1,8	0,81	mH	+/-10%

Notes:

(1) ΔT = 80 K; difference between winding-temperature and ambient-temperature = 80°C
(2) Electrical datas are measured at 25 °C
(3) All data referenced to sinusoidal commutation
(4) Peak torque duration at cold motor is 5 sec.
(5) Continuous stall torque is given for 5 rpm
(6) Winding temperature measured by using PT100 from one point.
Surface Measurement please check Temperature point drawing

Additional Note: For other performance data, please see torque/speed curves
Other torque - speed - voltage values are available.

SQM315-700 Performance Curves

SQM315-700 70 rpm nominal speed

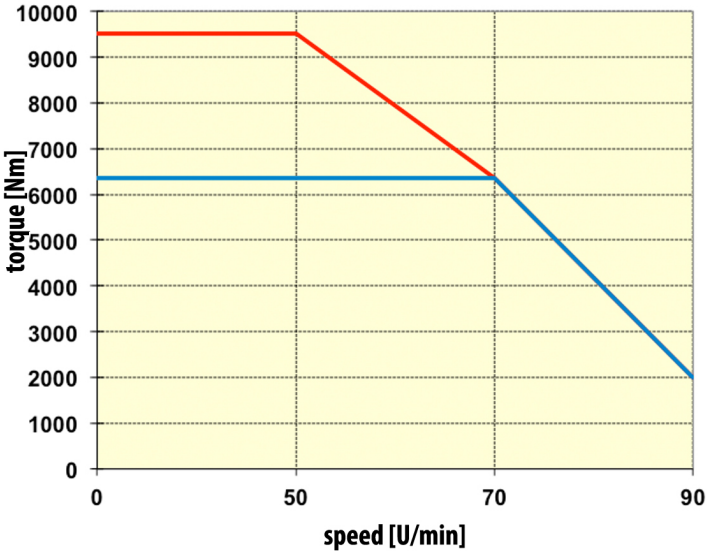

SQM315-700 100 rpm nominal speed

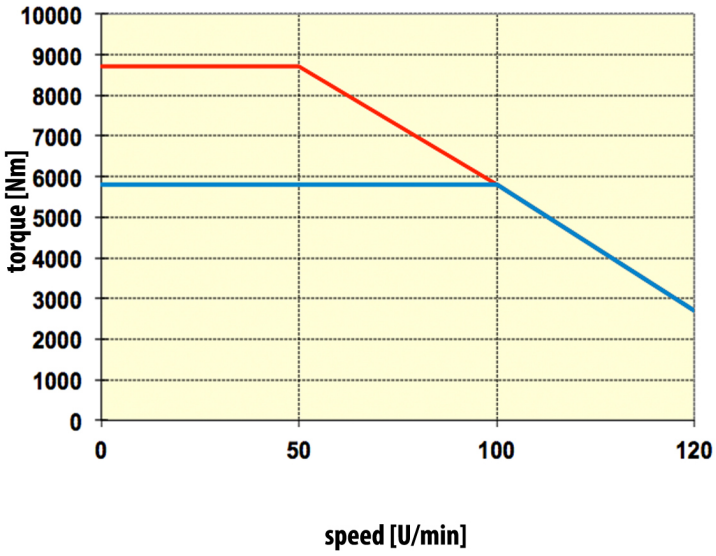

SQM315-700 150 rpm nominal speed

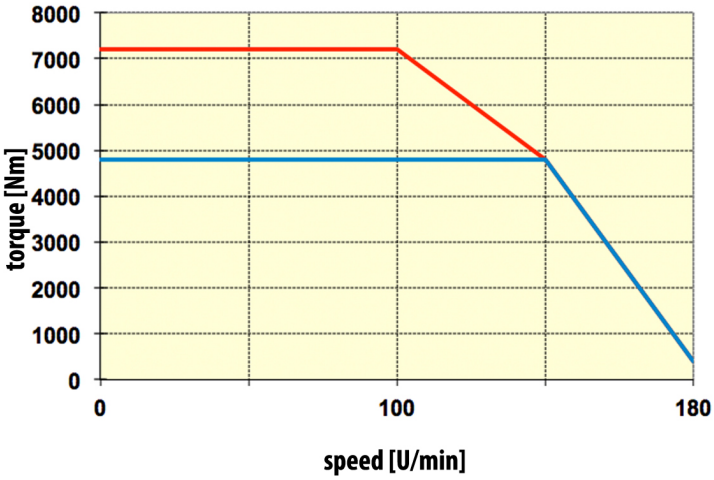

SQM315-700 200 rpm nominal speed

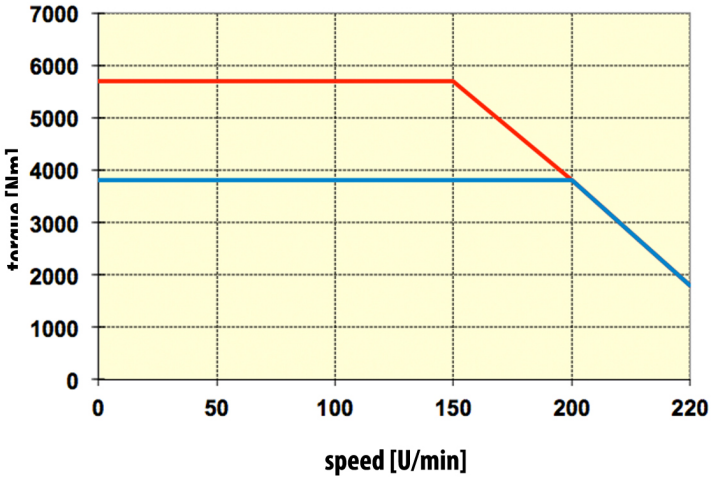

Mpeak cold motor | **Mpeak at Delta T=80k** | **Duty type: S3-40%, 1 min** | **Duty type: S3-60%, 1 min** | **Duty type: S1**

SQM315-900 Performance Data

Reference Data	Symbol	SQM315-900				Unit	Tol.
Frame Size		315					
Nominal Torque (80 K) (1)(3)(6)	M_N	7500	6600	5600	4600	Nm	
Nominal Speed	n_N	70	100	150	200	rpm	
Nominal Power (80 K) (1)(3)(6)	P_N	54,97	69,11	87,96	96,34	kW	
Nominal Current (80 K) (1)(3)(6)	I_N	151	166	225	185	A	
Design Voltage	U_{ac}	3 x 400				VAC	
	U_{bus}	560				VDC	
Nominal Frequency	f_N	64	92	138	183	Hz	
Pole Number	p	110					
Nominal Efficiency	η	95	96	96	97	%	
Moment of Inertia	J_{mot}	42,44662				kgm^2	
Duty		S1				-	
Protection class		IP54				-	
Isolation metarial class		H loaded to B				-	
Thermal Protection		PTO(Klixon) 120°C				-	
Cooling		IC 410 - Natural				-	
Colour		RAL 9005				-	
Weight		3030,00				kg	
Feedback		Please see the option list				-	
Connection Type		DELTA	STAR	DELTA	STAR	-	
Limit Data							
Peak Torque at cold motor (4)	M_{pkc}	16125	14190	12040	9890	Nm	
Cont. stall torque (80 K) (1)(3)(6)	M_0	7503,8	6623,8	5603,9	4604,1	Nm	
Stall current (80 K) (1)(3)(6)	I_0	151	126	176	170	A	
Peak Torque (80 K) (1)(3)(6)	M_{max}	11250	9900	8400	6900	Nm	
Maximum Current (80 K) (1)(3)(6)	I_{max}	227	249	338	278	A	
Speed at Peak Torque	n_{pkT}	63	85	150	195	rpm	
Max. Speed	n_{max}	115	120	200	235	rpm	
Torque at max. speed	M_{nmax}	750,0	660,0	560,0	460,0	Nm	
Thermal Time Constant	t_{th}	190	190	190	190	minutes	
Working Ambient Temp.		0 to 40				°C	
Storage Temp.		-30 to +85				°C	
Electrical Data							
Torque Constant (2)	k_T	49,67	39,76	24,89	24,86	Nm/A	+/-10%
E.M.F (ph-ph) (2)	U_E	3643	3160	1820	1580	V/1000 rpm	+/-10%
Motor Constant (2)	k_M	256,49	235,51	256,03	296,14	Nm/√W	Nom
Winding Resistance (ph-ph) (2)	R_{ph}	0,025	0,019	0,0063	0,0047	Ω	+/-10%
Winding Inductance (ph-ph) (2)	L	4,16	3,12	1,04	0,78	mH	+/-10%

Notes:

(1) ΔT = 80 K; difference between winding-temperature and ambient-temperature = 80°C
(2) Electrical datas are measured at 25 °C
(3) All data referenced to sinusoidal commutation
(4) Peak torque duration at cold motor is 5 sec.
(5) Continuous stall torque is given for 5 rpm
(6) Winding temperature measured by using PT100 from one point.
Surface Measurement please check Temperature point drawing

Additional Note: For other performance data, please see torque/speed curves
Other torque - speed - voltage values are available.

SQM315-900 Performance Curves

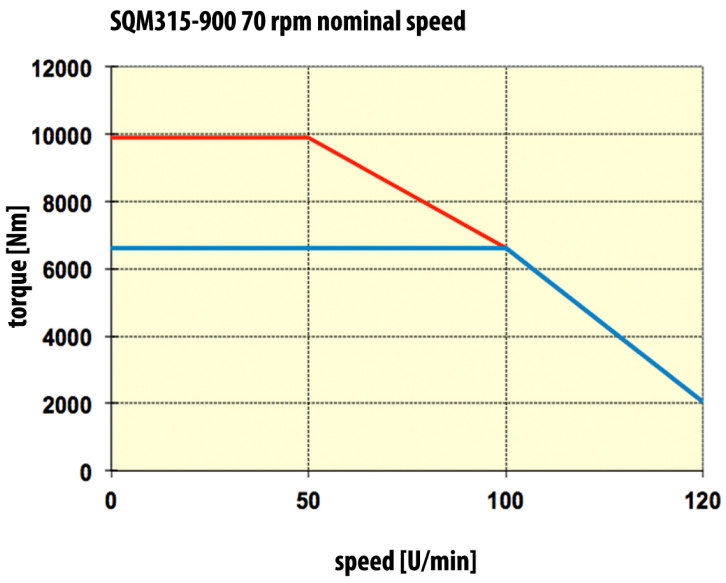

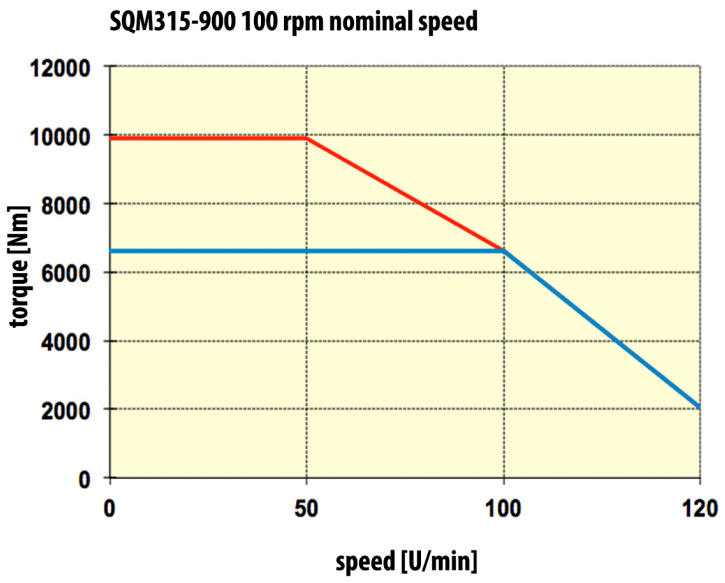

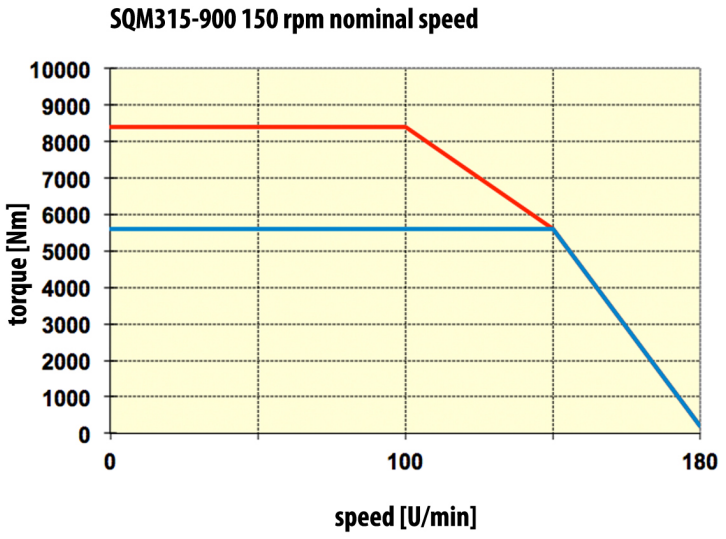

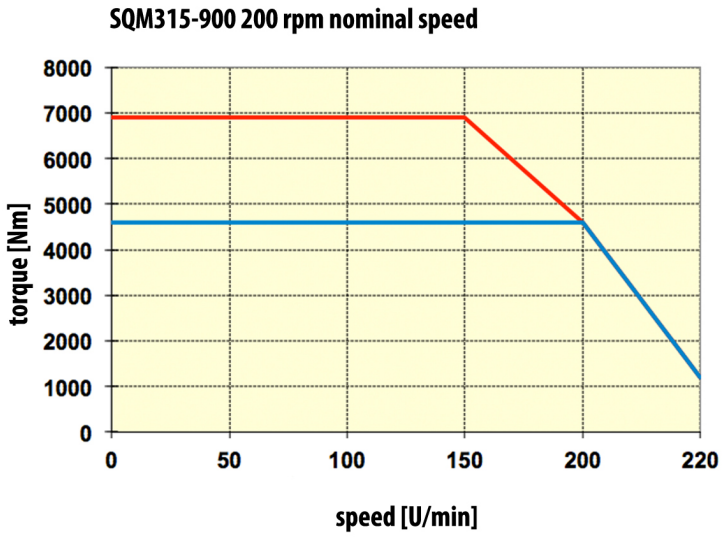

Mpeak cold motor | Mpeak at Delta T=80k | Duty type: S3-40%, 1 min | Duty type: S3-60%, 1 min | Duty type: S1

Bearing Fatigue and Shaft Loading

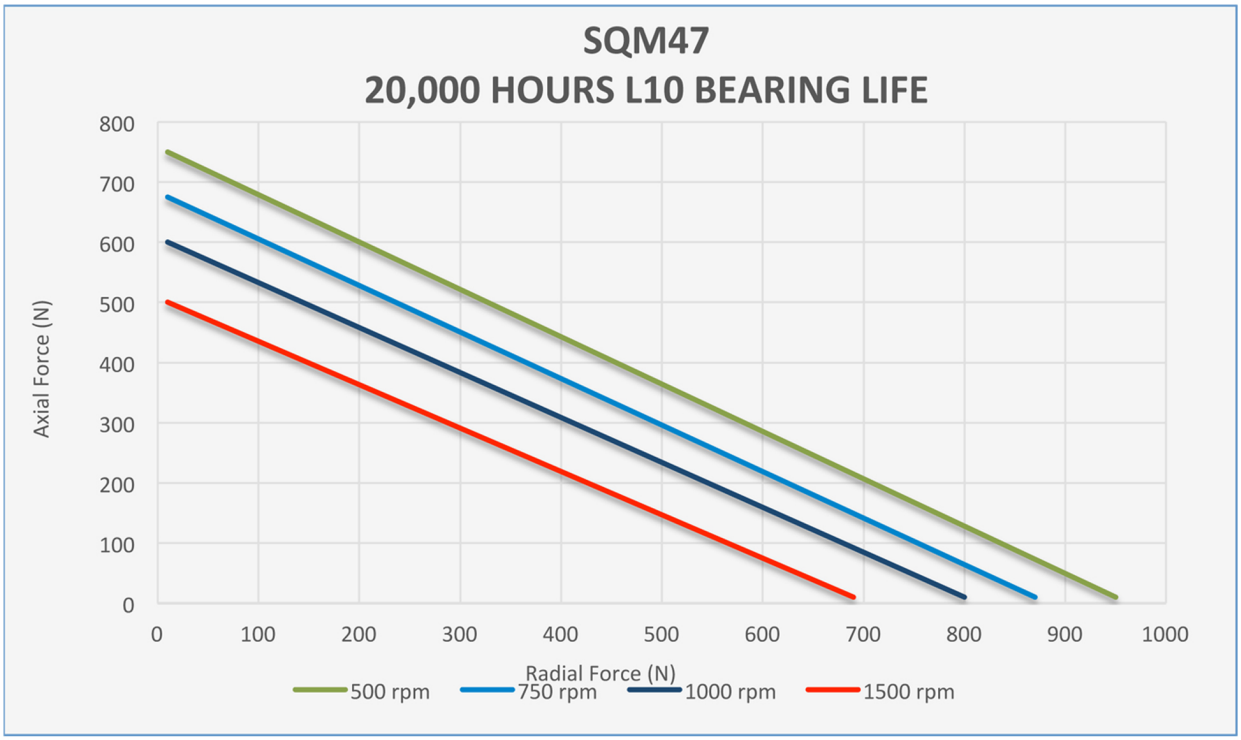

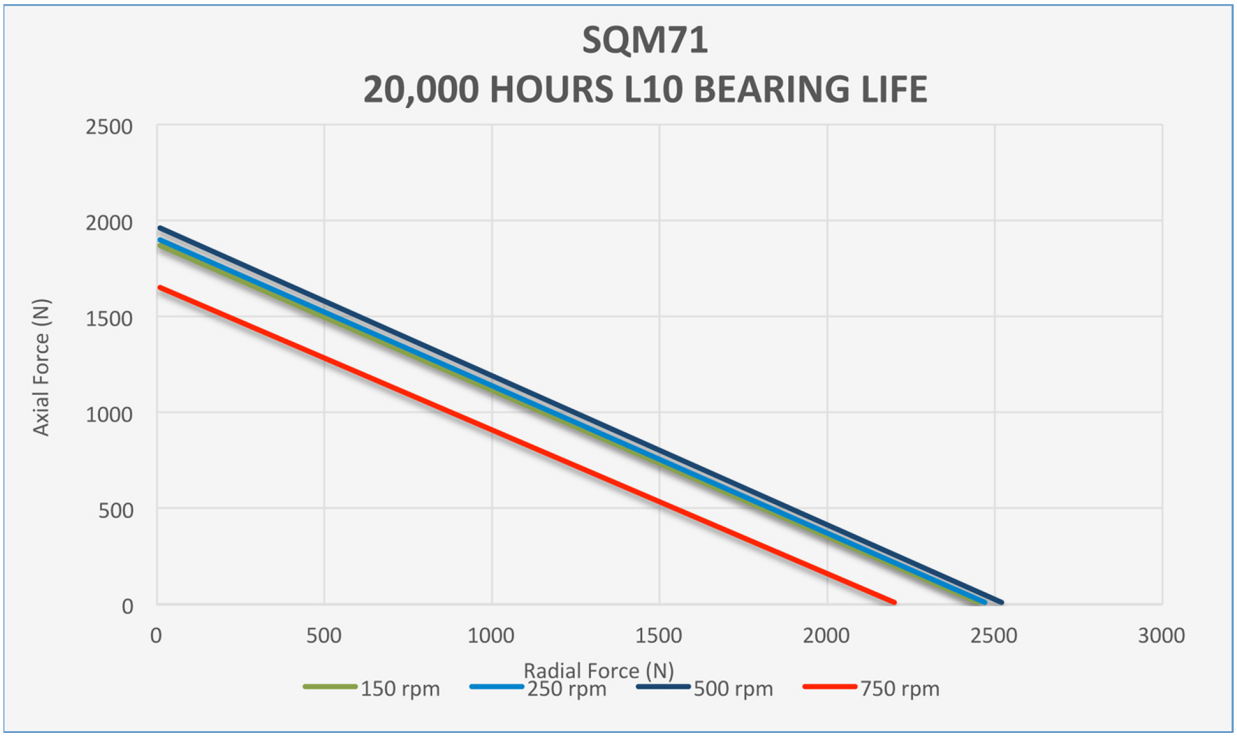

Bearing Fatigue and Shaft Loading

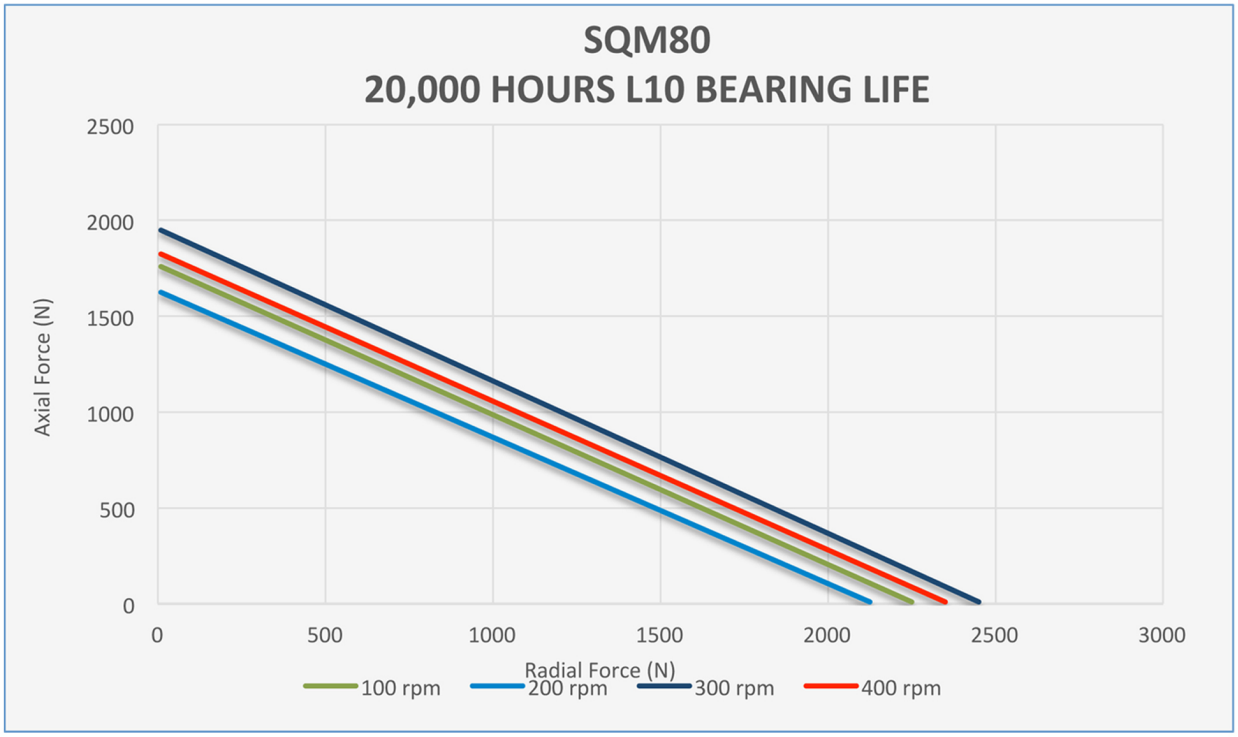

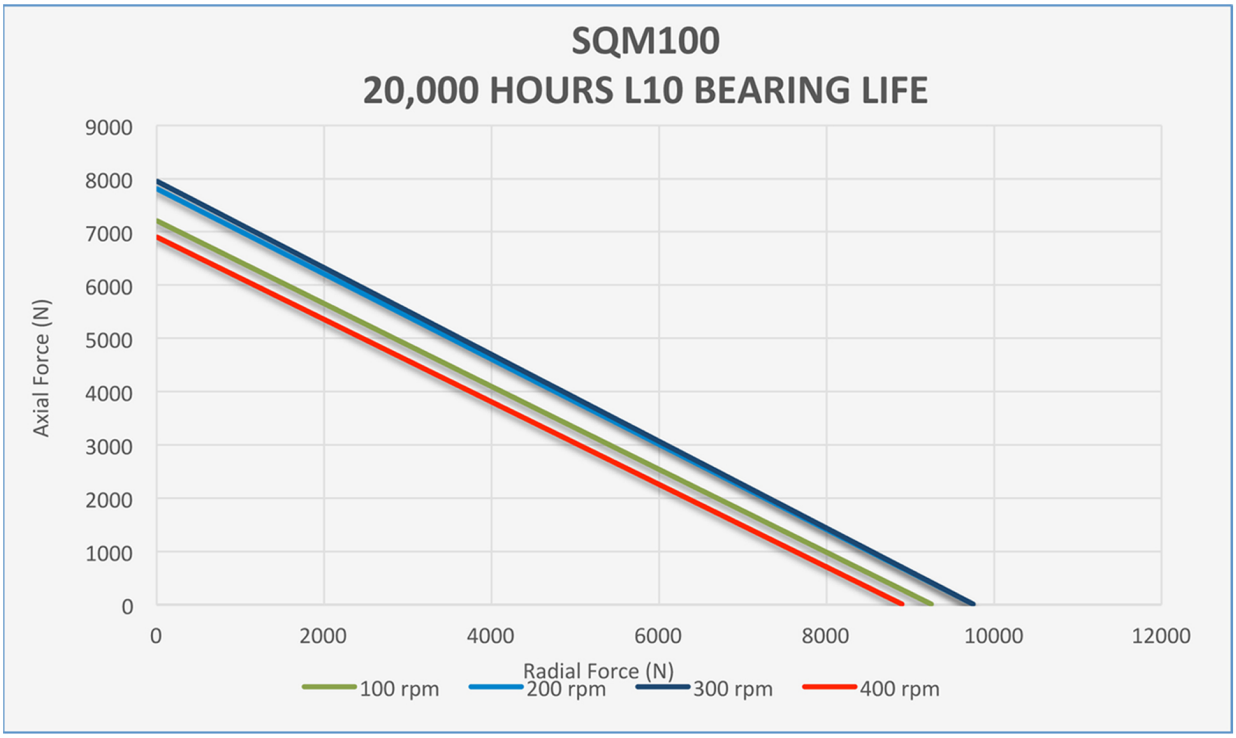

Bearing Fatigue and Shaft Loading

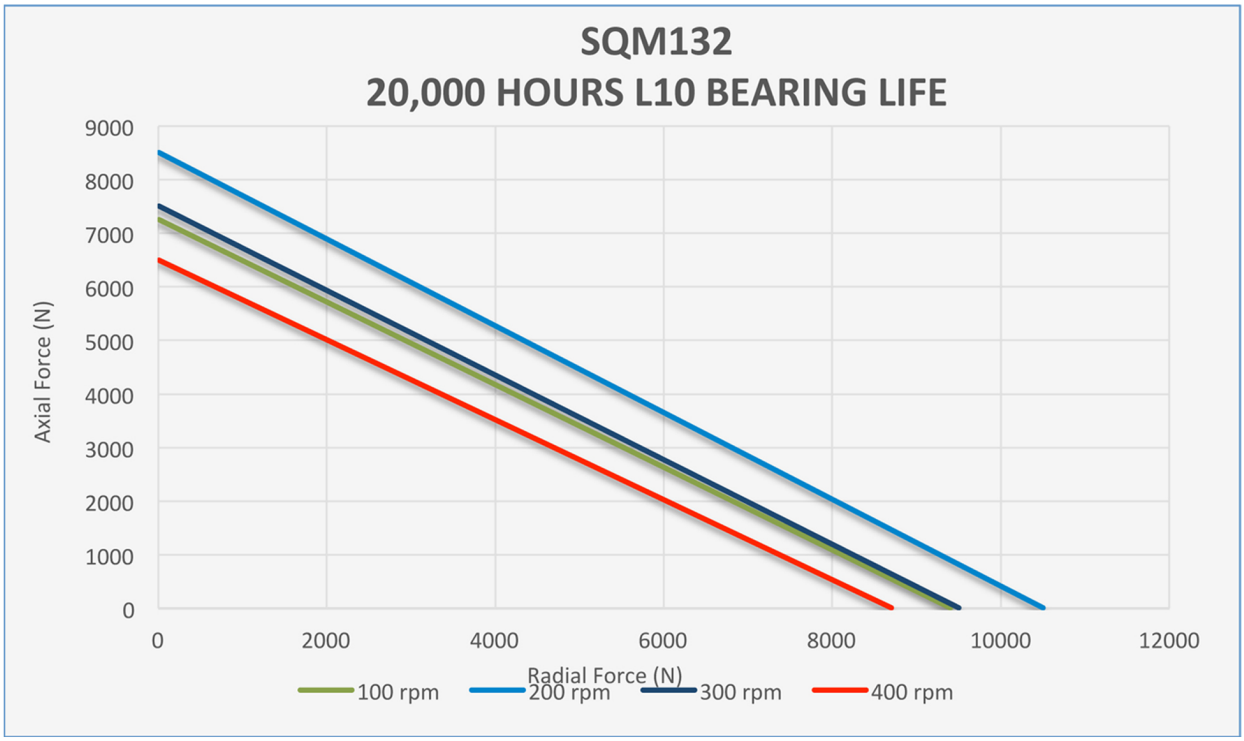

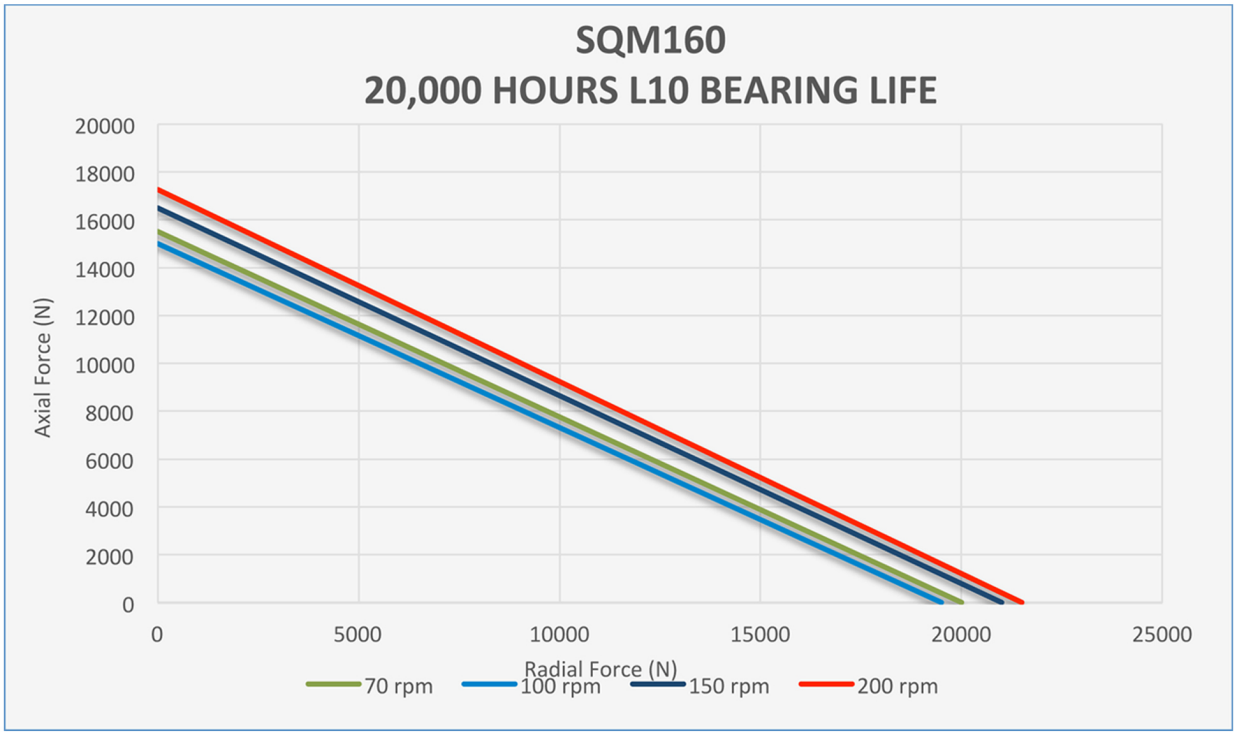

Bearing Fatigue and Shaft Loading

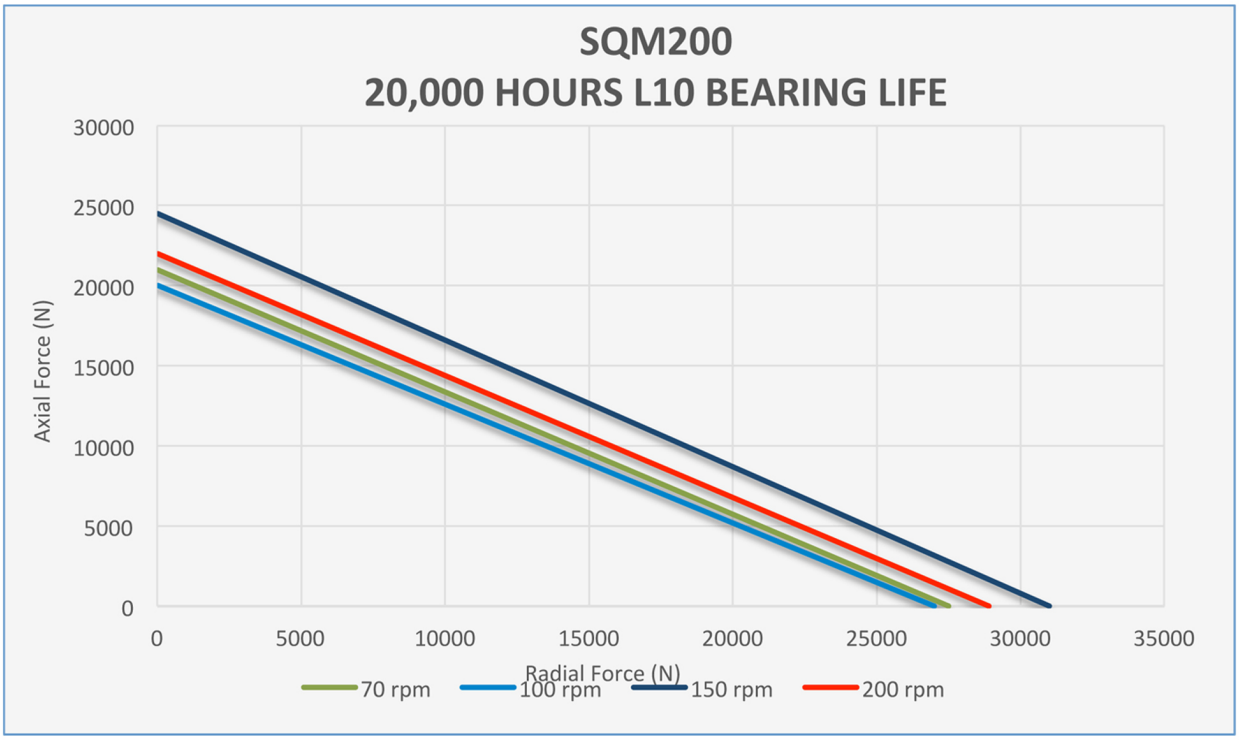

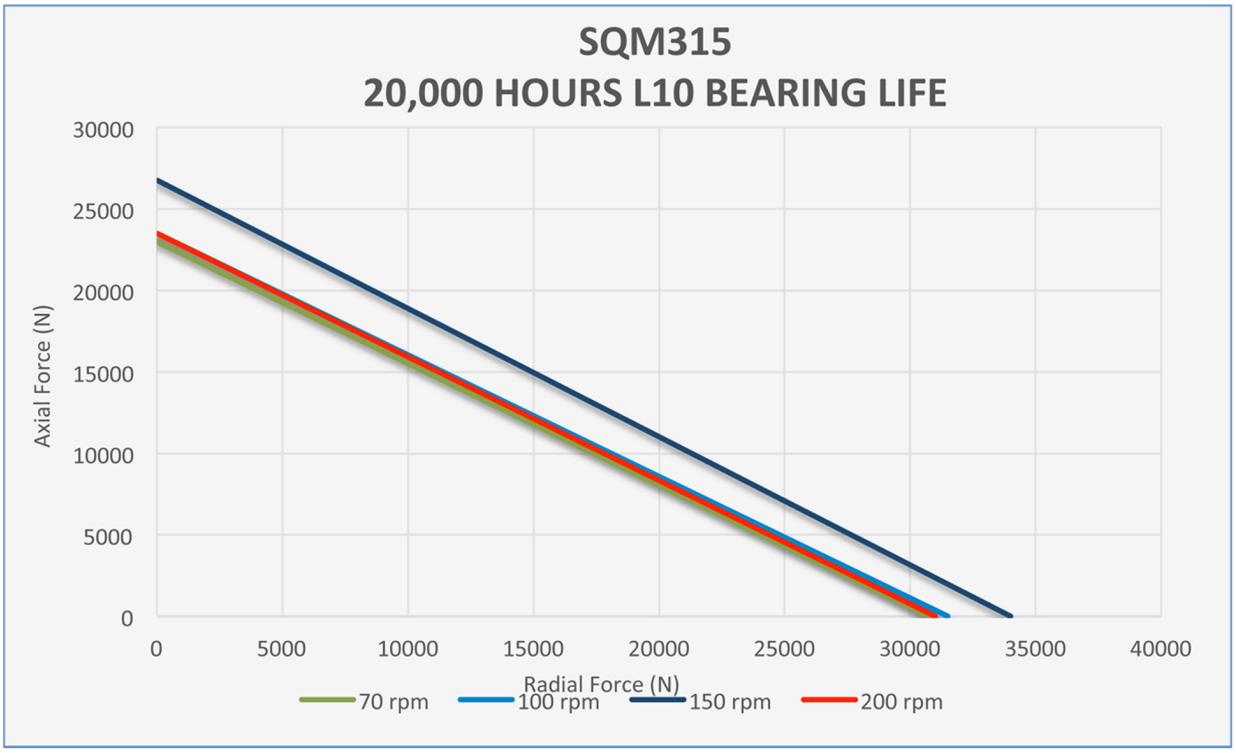

Feedback Selection and Options

MOTOR SIZE	Digital Encoder	Resolver	SinCos	SSI	EnDAT	BISS-C
SQM56		X	X			
SQM71	X	X	X	X	X	X
SQM80	X	X	X	X	X	X
SQM100	X	X	X	X	X	X
SQM132	X	X	X	X	X	X
SQM160	X	X	X	X	X	X
SQM200	X	X	X	X	X	X
SQM315	X	X	X	X	X	X

Feedback Selection and Options

Digital Encoder	
Pin Number	**Function**
1	B-
2	Thermal Protection
3	Z+
4	Z-
5	A+
6	A-
7	0 V
8	B+
9	+5V
10	N/C
11	N/C
12	N/C
13	N/C
14	N/C
15	Thermal Protection
16	Shield

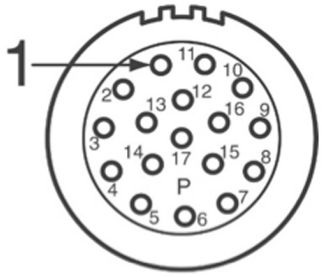

Technical Data Digital Encoder (Sendix 8.5020.252E.4096)	
Max. Speed	12 000 min-1 / 6 000 min-1 (continuous)
Working temperature range	-40°C 1) ... +85°C / [-40°F 1) ... +185°F]
Shock resistance acc. to EN 60068-2-27	2500 m/s2, 6 ms
Vibration resistance acc. to EN 60068-2-6	100 m/s2, 10 ... 2000 Hz
Output circuit	Push-Pull
Power supply	5 ... 30 V DC
Power consumption (no load)	typ. 50 mA / max. 100 mA
Permissible load / channel	max. ±20 mA
Pulse frequency	max. 300 kHz
Signal level	min. +V - 2.0 V / max. 0.5 V
Reverse polarity protection of the power supply	no
Pulse rate	4096

Feedback Selection and Options

RESOLVER	
Pin Number	**Function**
1	N/C
2	Thermal Protection
3	N/C
4	N/C
5	N/C
6	N/C
7	Thermal Protection
8	N/C
9	N/C
10	S1, Sin+
11	S3, Sin-
12	S2, Cos+
13	S4, Cos-
14	R1, Ref+
15	R2, Ref-
16	Shield

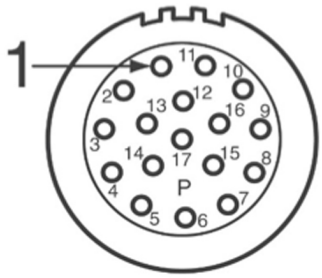

LTN Wiring Diagram

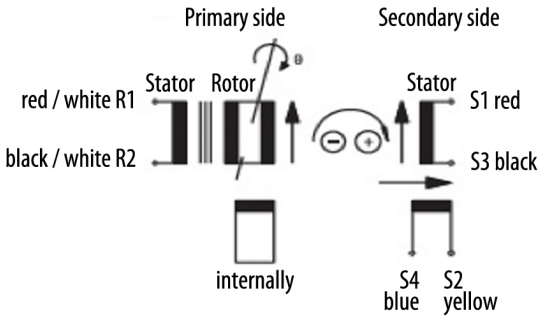

Feedback Selection and Options

Technical Data Resolver LTN RE-15-4-D04	
Pole pairs	4
Transformation ratio	0,5 ±10%
Input voltage	7 Vrms
Input current	16 mA
Input frequency	5 kHz
Phase shift (± 3°)	15°
Null voltage	max. 30 mV
Operating temperature	- 55 °C ... + 155 °C (-67 °F ... +311 °F)
Max. permissible speed	20.000 min-1
Hi-pot housing/winding	≤ 500 VAC at 50 Hz & 3 s
Hi-pot winding/winding	≤ 250 VAC at 50 Hz & 3 s
Rotor/Stator	Completely impregnated

Tamagawa Wiring Diagram

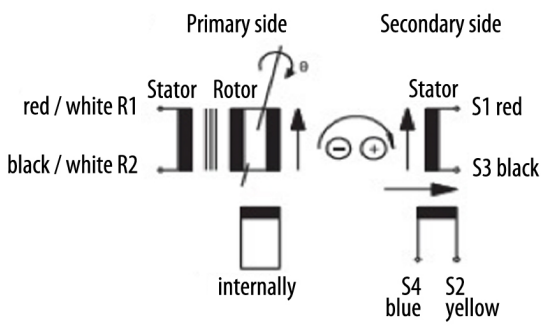

Technical Data Resolver Tamagawa		
	TS2620N21E11	TS2640N321E64
Input voltage	AC7Vrms 10kHz	
Transformation ratio [K]	0.5±5%	
Residual voltage	20mVrms Max	
Phase shift	0°REF	−5°±10°
Input impedance	70 + j100ΩNom	100 + j140Ω±15%
Output impedance	175 + j275ΩNom	120 + j240Ω±15%
Max operating speed	10,000min−1{rpm}	
Operating temperature range	−55°C~ + 155°C	
Insulation resistance	100MΩMin	

Feedback Selection and Options

SinCos	
Pin Number	**Function**
1	B-
2	Thermal Protection
3	Z+ (R+)
4	Z- (R-)
5	A+
6	A-
7	0 V
8	B+
9	+5V
10	Sin-
11	Sin+
12	Cos+
13	Cos-
14	N/C
15	Thermal Protection
16	Shield

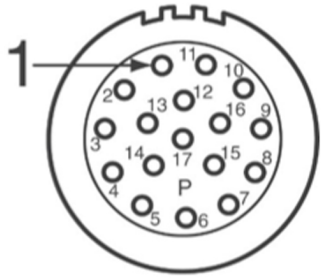

Technical Data SinCos (S21)	
Protection class (EN 60529)	IP 40
Max. Speed	max. 12 000 rpm (continuous), max. 15 000 rpm (short term)
Vibration resistance (DIN EN 60068-2-6)	≤ 100 m/s² (10 ... 2,000 Hz)
Shock resistance (DIN EN 60068-2-27)	≤ 1,000 m/s² (6 ms)
Operating temperature	-15 °C ... +120 °C
Supply voltage	DC 5 V ±10 %
Max. current w/o load	120 mA
Reference signal R	> 0.4 V (1 pulse per revolution)
Number of pulses	2048
3dB limiting frequency	500 kHz

Feedback Selection and Options

Technical Data SinCos (ERN 1385)	
Interface	~ 1 VPP
Line count / system accuracy	2048 / ± 20
Voltage supply	5 V DC ± 0.25 V
Current consumption	≤ 130 mA
Shaft	Taper shaft ⊡ 9.25 mm; taper 1:10
Mech. permissible speed n	≤ 15 000 min–1
Shock 6 ms	≤ 2 000 m/s2 (EN 60 068-2-27)
Operating temperature	–40 °C to + 120 °C
Protection EN 60529	IP 40 when mounted

Feedback Selection and Options

SSI Kübler	
Pin Number	**Function**
1	B-
2	Thermal Protection
3	N/C
4	N/C
5	A+
6	A-
7	0 VDC
8	B+
9	+5 VDC
10	N/C
11	CLK+ (T+)
12	CLK- (T-)
13	DT+
14	DT-
15	Thermal Protection
16	Shield

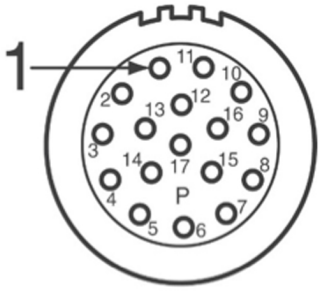

Technical Data SSI (8.5873.GK3E.G323)	
Maximum speed hollow shaft version	IP65 up to Tmax: 6000 min-1, 3000 min-1 (continuous)
Protection acc. to EN 60529	shaft side IP65
Working temperature range	-40°C ... +90°C [-40°F ... +194°F] (+105°C [+212°F] with interface E)
Shock resistance acc. to EN 60068-2-27	2500 m/s2, 6 ms
Vibration resistance acc. to EN 60068-2-6	100 m/s2, 55 ... 2000 Hz
shaft/hollow shaft	stainless steel
flange	aluminium
housing	zinc die-cast
Power supply	5 V DC (+5 %) or 10 ... 30 V DC
Current consumption (no load) 5 V DC	max. 70 mA
Reverse polarity protection of the power supply	yes
Resolution	13 bit
Code	gray
SSI clock rate	50 kHz ... 2 MHz

Feedback Selection and Options

ENDAT ECN 413 / ECN 1313	
Pin Number	**Function**
1	B-
2	Thermal Protection
3	N/C
4	N/C
5	A+
6	A-
7	0 VDC
8	B+
9	+5 VDC
10	N/C
11	CLK+
12	CLK-
13	DT+
14	DT-
15	Thermal Protection
16	Shield

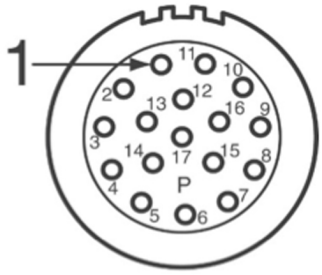

Technical Data EnDat (ECN 413 / ECN1313)	
Interface	EnDat01
Position values/rev	8192 (13 bits)
Elec. permissible speed / Deviation	≤ 1 500 min−1/±1 LSB / ≤ 12 000 min−1/±50 LSB
Incremental signals	~ 1 VPP
Line count / system accuracy	2048 / ±20
Voltage supply	3.6 V to 14 V DC
Current consumption	5 V: 85 mA (typical, without load)
Shaft	Taper shaft ϕ 9.25 mm; taper 1:10
Mech. permissible speed n	≤ 12 000 min−1
Shock 6 ms	≤ 2000 m/s2 (EN 60 068-2-27)
Operating temperature	−10 °C to +100 °C
Protection EN 60529	IP64

Feedback Selection and Options

BISS-C	
Pin Number	**Function**
1	B-
2	Thermal Protection
3	N/C
4	N/C
5	A+
6	A-
7	0 VDC
8	B+
9	+5 VDC
10	N/C
11	CLK+
12	CLK-
13	DT+
14	DT-
15	Thermal Protection
16	Shield

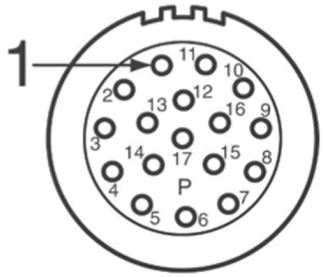

Technical Data BISS-C (8.5873.1K3E.C3XX)	
Maximum speed hollow shaft version	IP65 up to Tmax: 6000 min-1, 3000 min-1 (continuous)
Protection acc. to EN 60529	shaft side IP65
Working temperature range	-40°C ... +90°C [-40°F ... +194°F] (+105°C [+212°F] with interface E)
Shock resistance acc. to EN 60068-2-27	2500 m/s2, 6 ms
Vibration resistance acc. to EN 60068-2-6	100 m/s2, 55 ... 2000 Hz
shaft/hollow shaft	stainless steel
flange	aluminium
housing	zinc die-cast
Power supply	5 V DC (+5 %) or 10 ... 30 V DC
Current consumption (no load) 5 V DC	max. 70 mA
Reverse polarity protection of the power supply	yes
Singleturn resolution	13 bit
Code	binary
Clock rate	50 kHz ... 10 MHz

Motor Thermal Protection

PTO	PTC	KTY84	PT100
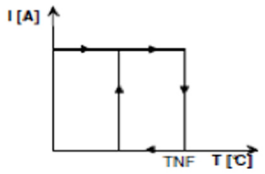	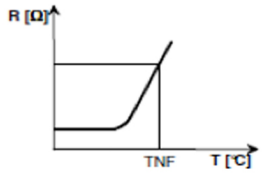	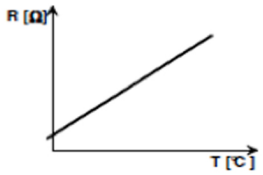	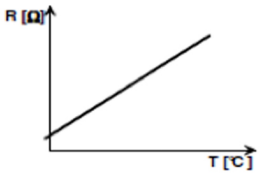

	PTO (klixon)	PTC	KTY-PT100
Type of protection	Slow overloads, insufficient ventilation.	Fast and high overloads, insufficient ventilation.	Temperature monitoring.
Temperature measure	NO	NO	YES
Type of signal	Normally closed contact.	Non linear resistance.	Linear variable resistance.
Intervention Temperature	120°C	120°C	-
Resistance 20°C	< 1 Ω	<100 Ω	~108 Ω
Resistance at intervention Temperature	< 1 Ω	≤ 1300 Ω	-
Resistance after intervention	∞	≥ 4000 Ω	-
Nominal Supply Voltage	250V	7,5 V	-
Max. supply voltage	max. 500V	max. 30V	-
Max. current	6,3A	2 mA	
Reset Temperature $\Delta\delta_R$	$\Delta\delta_R$ >35°C	-	

Therminal Box

SQM100

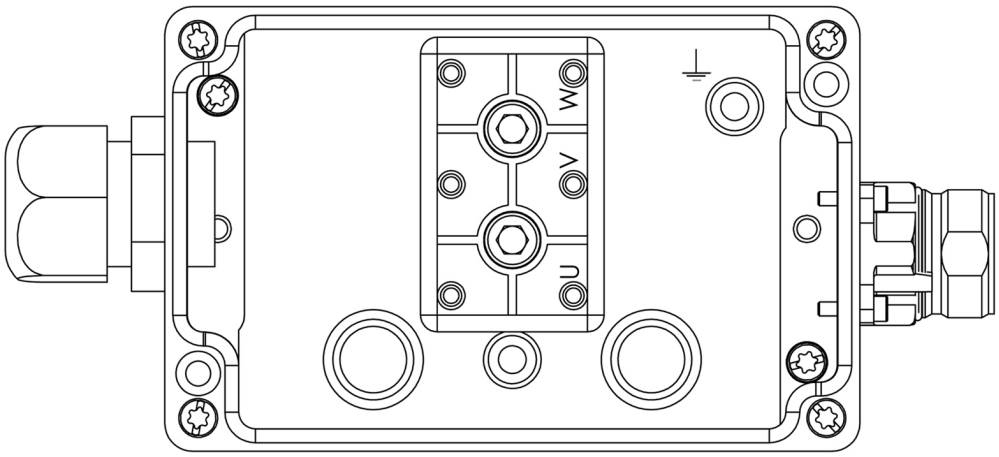

SQM132

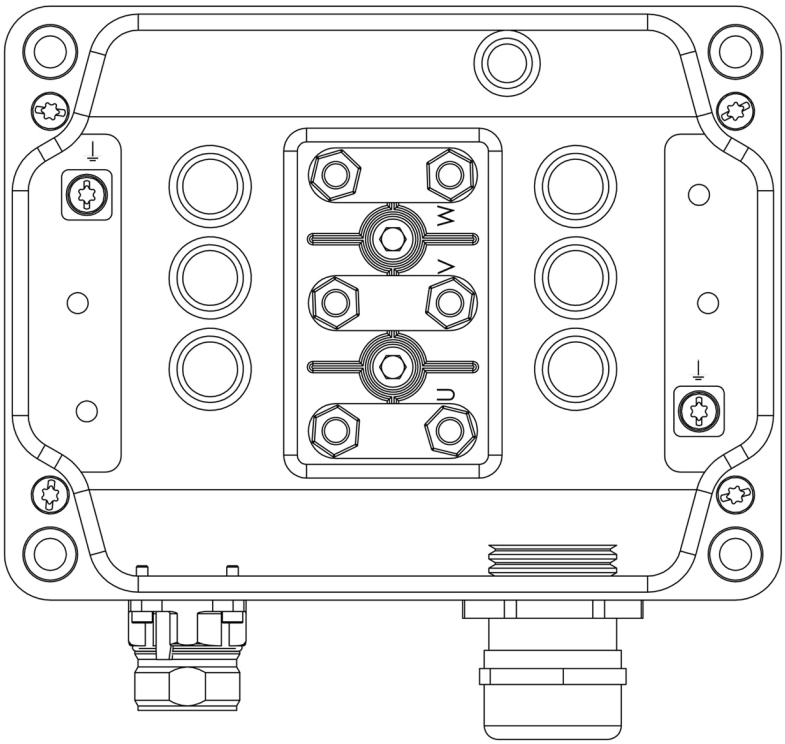

Therminal Box

SQM160

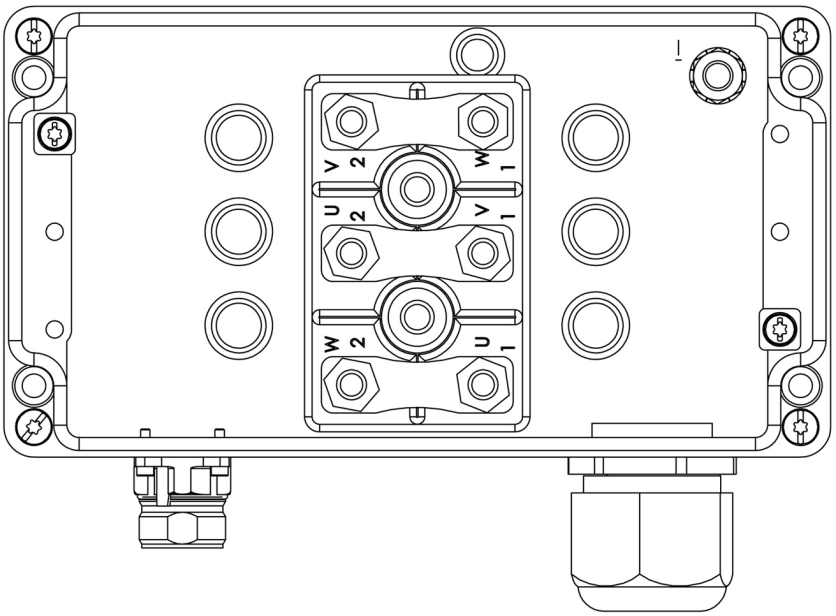

SQM200

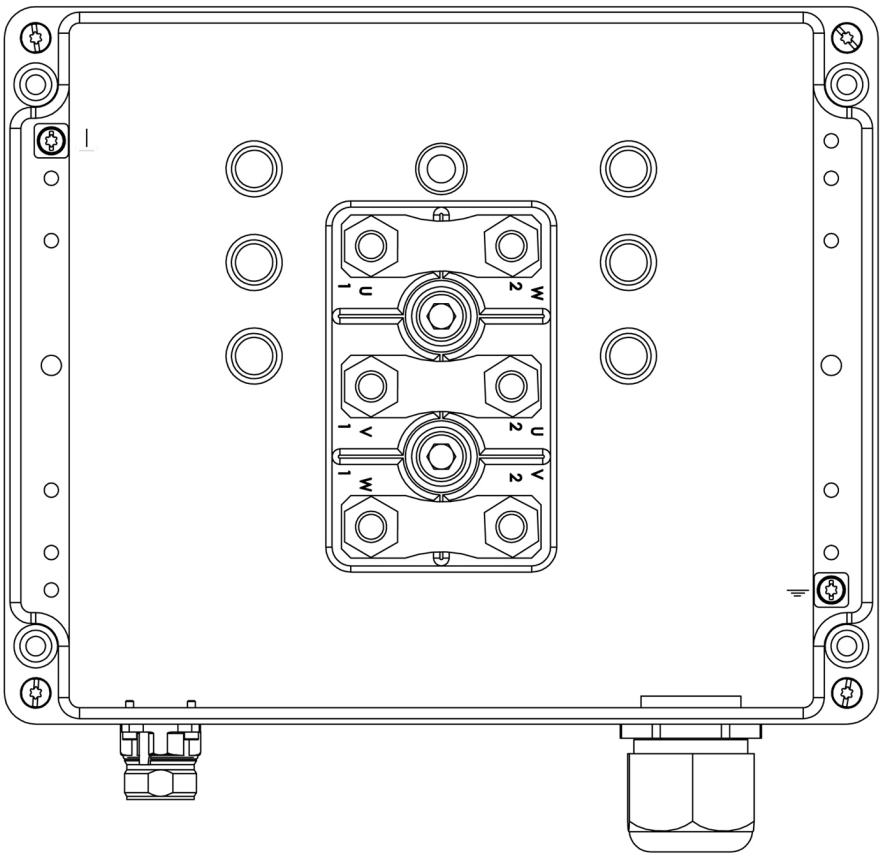

Power Connector

Power Connector*

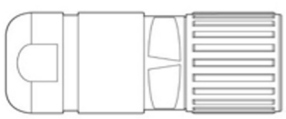

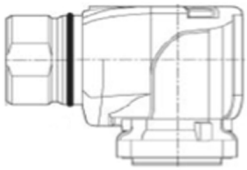

Cable Option

Connector Part Number
SF-5ES1N8A80DU

Connector Part Number:
SF-5EP1N8AAD00

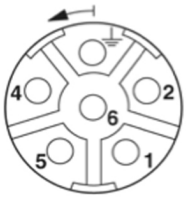

Pin Nr.	Function
1	U
2	V
3	Ground
4	W
5	N/C*
6	N/C*

Suggested Mating Connector: Phoenix / SF-5ES1N8A80DU

NOTE: Reserved for brake supply if the motor contains mechanical brake.

* SQM56 / 71 /80 /100 (optional for SQM100)
** SQM100 / 132 / 160 / 200 / 315
(Design can change due to special applications)

2D Dimensions

SQM47

	A (mm)	B (mm)	C (mm)
SQM47-40	40	162	192
SQM47-70	70	192	222
SQM47-100	100	222	252

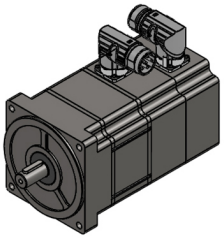

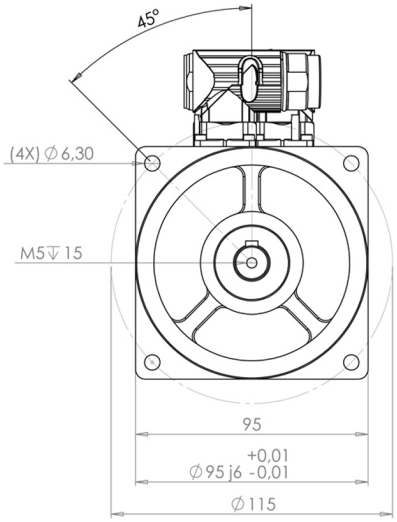

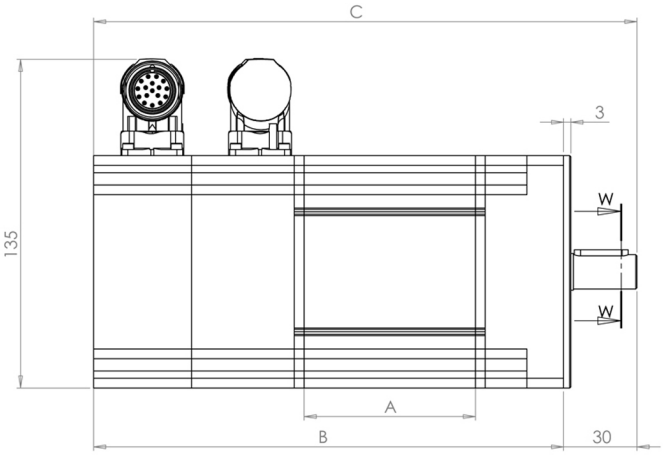

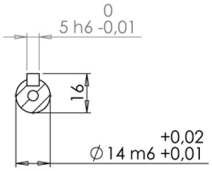

KESIT W-W
ÖLÇEK 1 : 1.5

2D Dimensions

SQM71

	A (mm)	B (mm)	C (mm)
SQM71-90	90	257,5	317,5
SQM71-130	130	297,5	357,5
SQM71-170	170	337,5	397,5

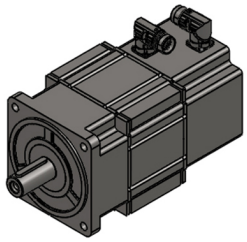

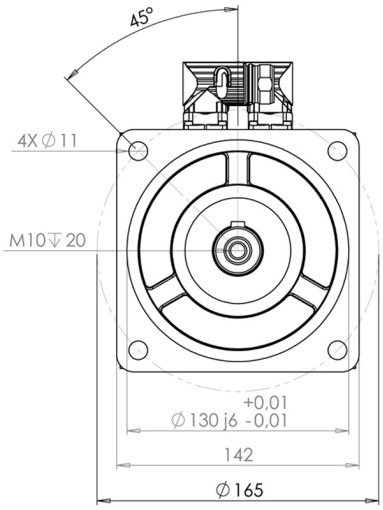

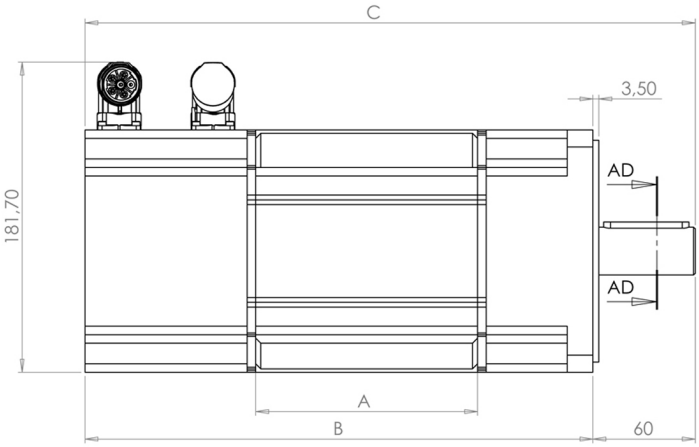

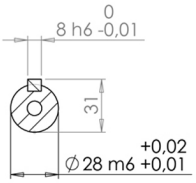

KESIT AD-AD
ÖLÇEK 1 : 2.3

2D Dimensions

SQM80

	A (mm)	B (mm)	C (mm)
SQM80-150	150	316	396
SQM80-200	200	366	446
SQM80-240	240	406	486

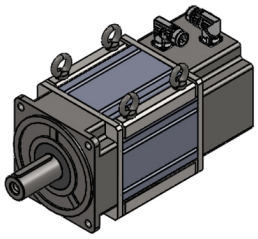

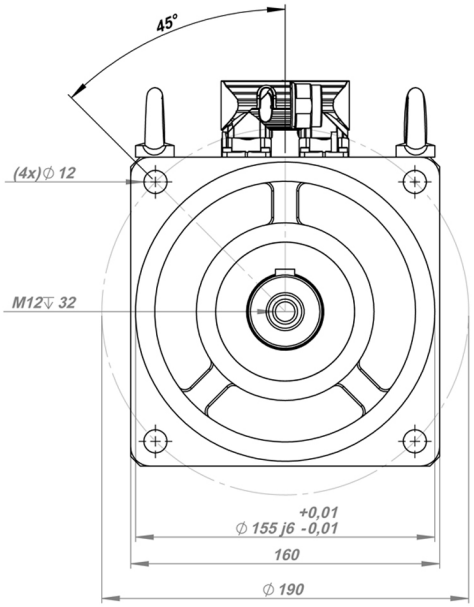

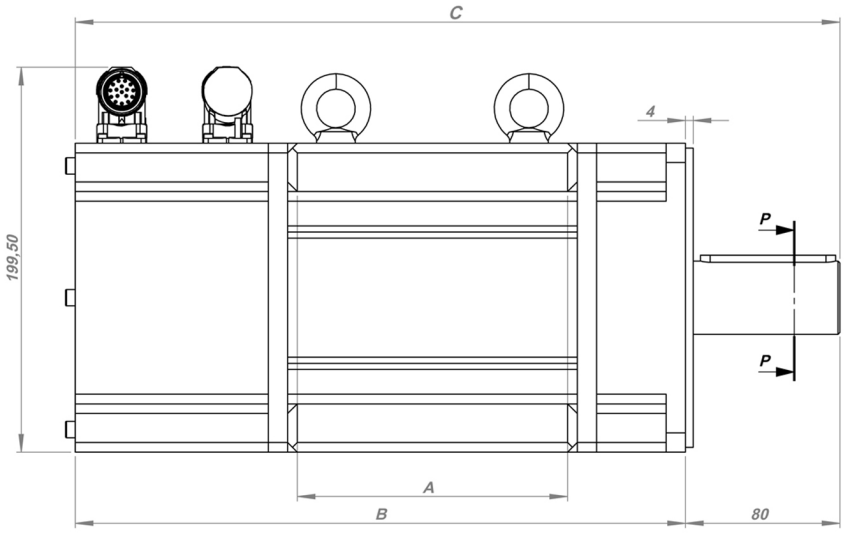

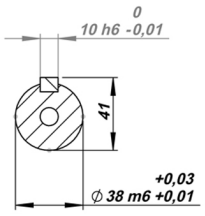

KESIT P-P
ÖLÇEK 1 : 2.5

2D Dimensions

SQM100

	A (mm)	B (mm)	C (mm)
SQM100-140	140	344	454
SQM100-200	200	404	514
SQM100-240	240	444	554

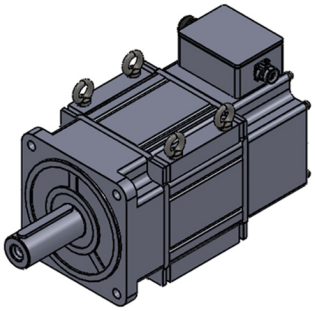

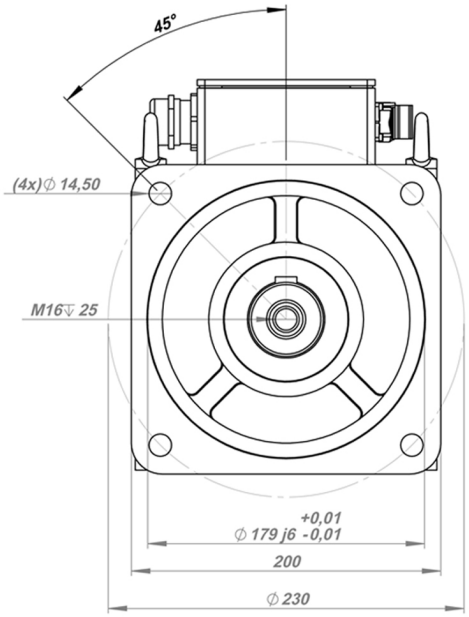

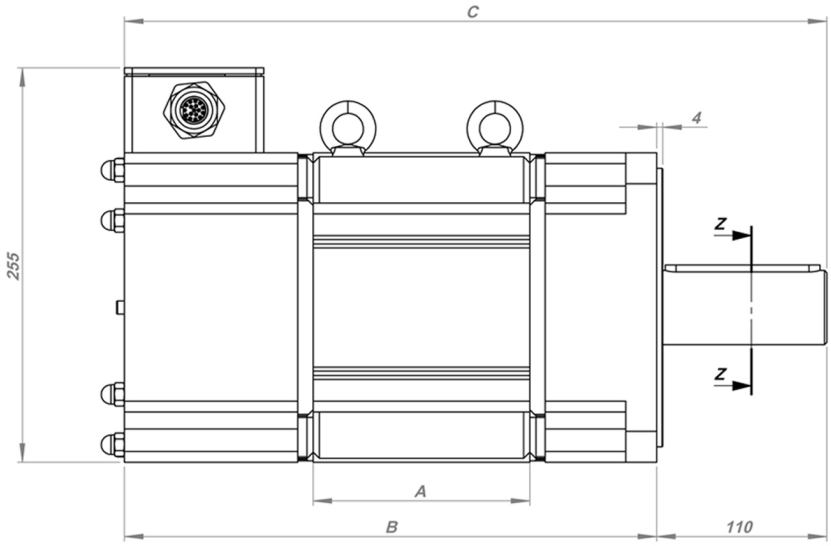

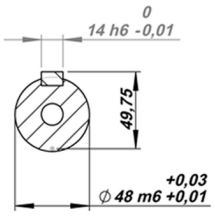

KESIT Z-Z
ÖLÇEK 1 : 3

2D Dimensions

SQM132

	A (mm)	B (mm)	C (mm)	D (mm)
SQM132-140	140	374	514	255
SQM132-200	200	434	574	315
SQM132-240	240	474	614	355

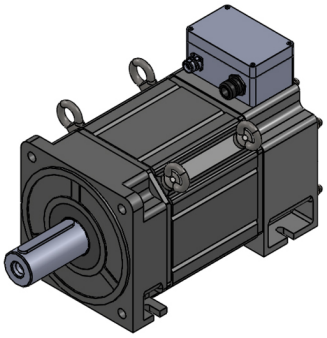

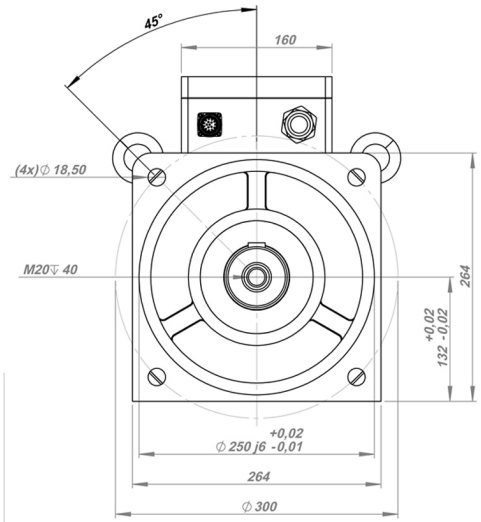

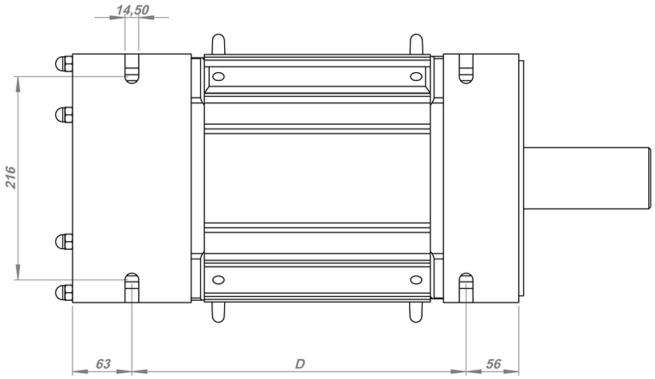

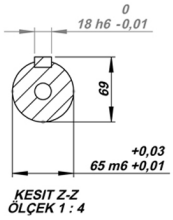

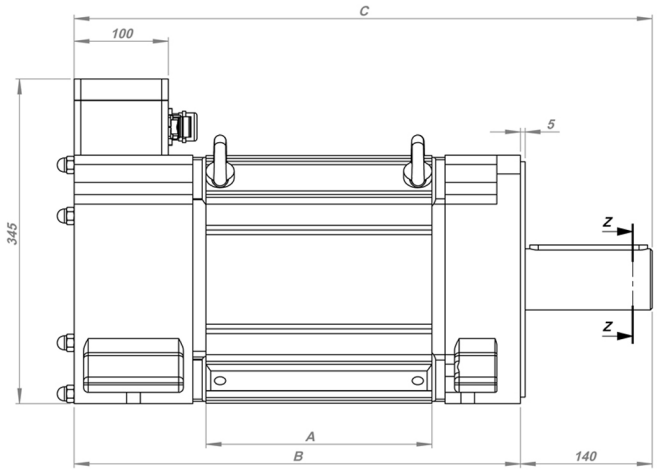

2D Dimensions

SQM160

	A (mm)	B (mm)	C (mm)	D (mm)
SQM160-200	200	451	591	327,5
SQM160-300	300	551	691	427,5
SQM160-400	400	651	791	527,5
SQM160-500	500	751	891	627,5

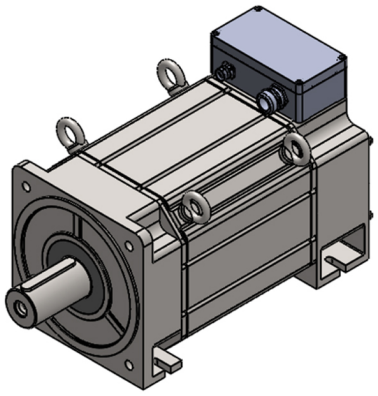

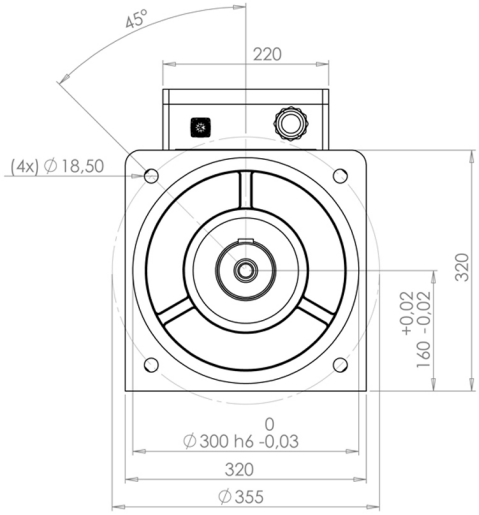

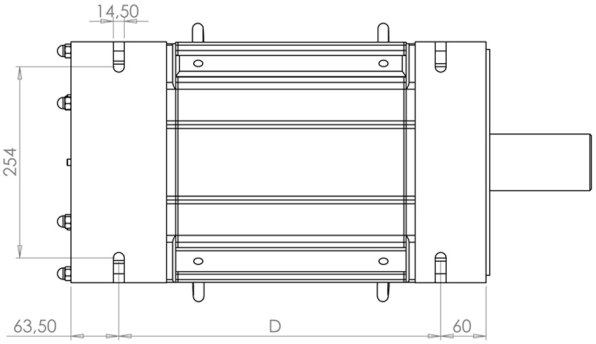

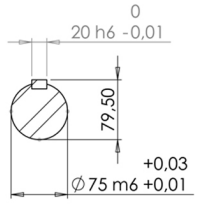

KESIT U-U

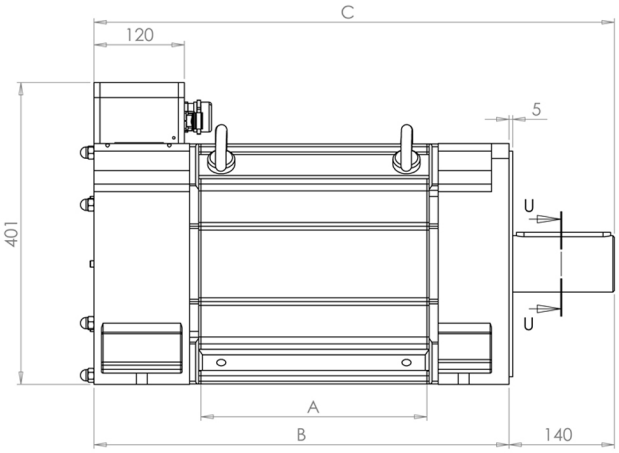

2D Dimensions

SQM200

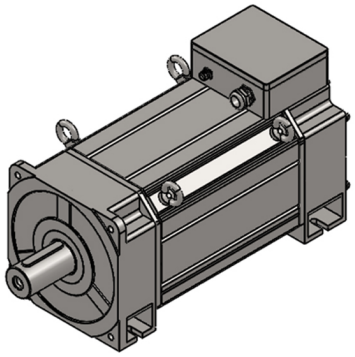

	A (mm)	B (mm)	C (mm)	D (mm)
SQM200-300	300	627	797	477,5
SQM200-400	400	727	897	577,5
SQM200-500	500	827	997	677,5
SQM200-600	600	927	1097	777,5
SQM200-700	700	1027	1197	877,5
SQM200-800	800	1127	1297	977,5

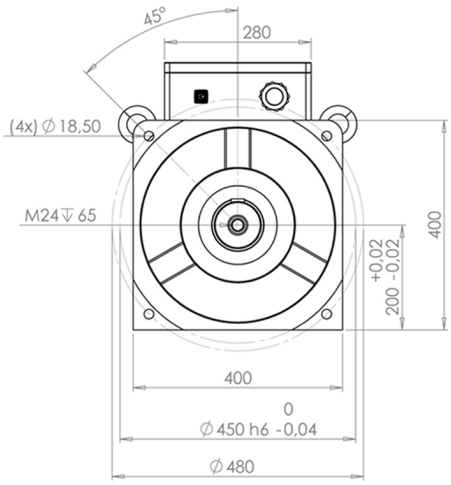

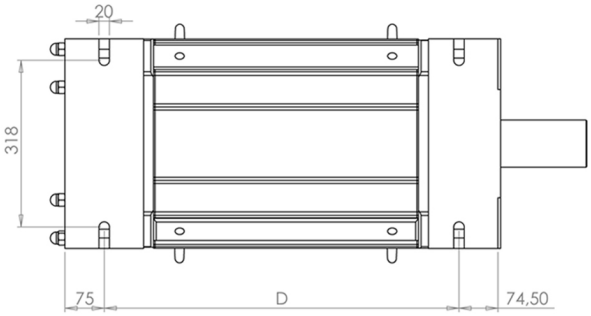

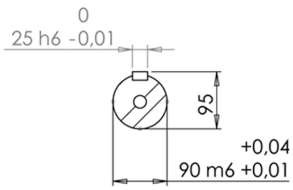

SECTION M-M
SCALE 1 : 7

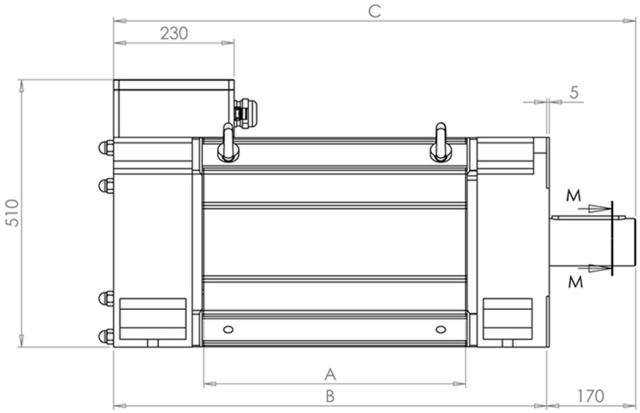

2D Dimensions

SQM315

	A (mm)	B (mm)	C (mm)	D (mm)
SQM315-500	500	945	1195	747,5
SQM315-700	700	1145	1395	947,5
SQM315-900	900	1345	1595	1147,5

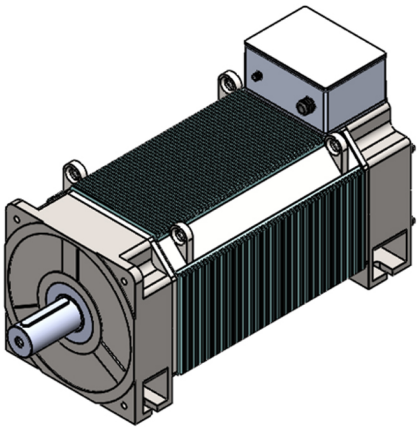

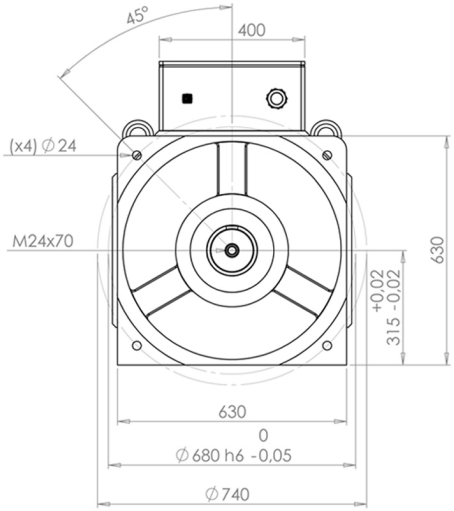

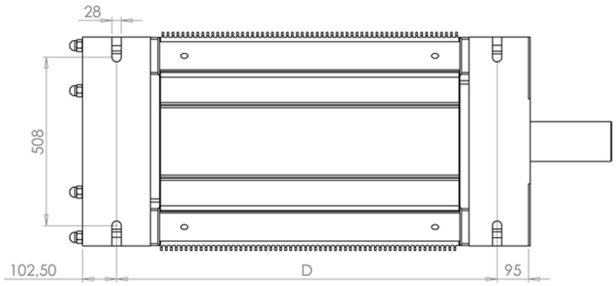

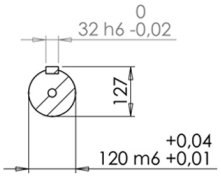

SECTION I-I

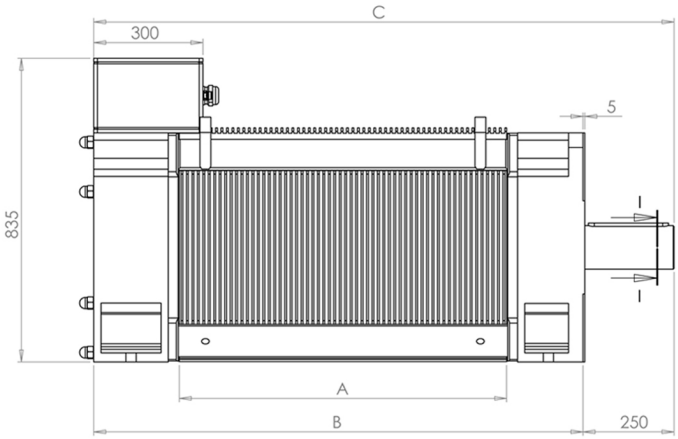

Brake Options

Please contact EMF Motor for brake options.

Motor Selection Form

EMF Motor®

INDUSTRIAL MOTOR CONFIGURATION FORM

info@emfmotor.com

Product Configuration :

Date:_____

Name: _____
Company :_____
Country: _____
Order Nr: _____
Sale Executive _____

Tel :_____
Fax :_____
E-mail:_____

Fax: +90 216 595 1901

Motor Specifications

1	***Size :***	☐ 47	☐ 71	☐ 80	☐ 100	☐ 132	☐ 160	☐ 200	☐ 315

2	**Length:**	☐ 40	☐ 70	☐ 100	☐ 90	☐ 130	☐ 140	☐ 150	☐ 170
		☐ 200	☐ 240	☐ 300	☐ 400	☐ 500	☐ 600	☐ 700	☐ 800
		☐ 900	☐ 1000						

3	***Protection Class***	☐ IP21	☐ IP54	☐ IP55	☐ IP56

4	***Nominal Speed***	☐ 70	☐ 100	☐ 150	☐ 200	☐ 250	☐ 300	☐ 400
		☐ 500	☐ 750	☐ 1000	☐ 1500			
	Note :							

5	**Enkoder/*Encoder Type:***	☐ Resolver	☐ SSI	☐ SinCos	☐ EnDat
		☐ EnDat Multit.	☐ SSI Multit.		
	Note :				

6	***Shaft Type :***	☐ *Standard Shaft*		☐ *Hollow Shaft*
		☐ *Thrust Bearing*		
	Note :			

7	***Shaft Config:***	☐ *Without key*	☐ With key	☐ *Double Shaft*
		☐ *According to DIN5480 internal teeth*	☐ *According to DIN5480 external teeth*	
		☐ *Shaft with one key and blind hole*	☐ *Shaft with double key and blind hole*	
	Note :			

8	***Mounting Type***	☐ B14	☐ B3	☐ *Vertical Mount*
		☐ B5		

Motor Selection Form

EMF Motor®

INDUSTRIAL MOTOR CONFIGURATION FORM

info@emfmotor.com

9	***Power Supply***	☐ *M23 Connector* ☐ *M40 Connector* ☐ *Terminal Box*
	Note :	

10	***Main Connection Outlet***	☐ *On top* ☐ *On the L-Side* ☐ *On the R-Side* ☐ *On the B-Side*

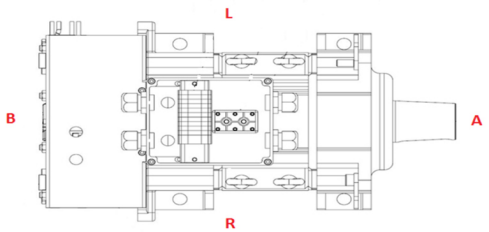

11	***Thermal Protection***	☐ Pt100 ☐ PTC ☐ KTY84 120 ☐ PTO 120°C ☐ *Without thermal protection*
	Note :	

12	***Signal Cable***	☐ 3 m ☐ 7 m ☐ 15 m ☐ *Without cable*
	Note :	

13	***Power Cable***	☐ 3 m ☐ 7 m ☐ 15 m ☐ *Without cable*
	Note :	

14	***Colour***	☐ *RAL 9005 Black*
	Note :	

15	***Insulation Class***	☐ F ☐ H ☐ *Tropicalisation*
	Note :	

16	**Duty Type**	☐ S1 ☐ S3
	Note :	

Notes

Our new factory

1st Machine and Accessories Manufacturing
Technologies R&D Project Market
Industrialist Category 2012
Grand Prize

Istanbul Chamber of Industry
Energy Efficient Product
Jury Honourable Mention 2011

EMF Motor®

Germany
EMF 97 GmbH
Horchheimer StraBe 74-78
D 67547 Worms

T. +49 6241 935 210
F. +49 6241 935 215

Türkiye
EMF Motor A.Ş.
Ramazanoğlu Mah. Sanayi Cad. No:9
TR 34906 İstanbul - Pendik / Türkiye

T. +90 216 595 19 00
F. +90 216 595 19 01

Industrie 4.0